intel

# SYP301
# INSTALLATION AND USER'S GUIDE

Copyright © 1987, Intel Corporation. All rights reserved.
Intel Corporation, 3065 Bowers Avenue, Santa Clara, California 95051

Order Number: 451684-001

intel®

# SYP301 INSTALLATION AND USER'S GUIDE

Order Number: 451684-001

Intel Corporation
3065 Bowers Avenue
Santa Clara, California 95051

Copyright © 1987, Intel Corporation, All Rights Reserved

**CAUTION** This equipment generates, uses, and can radiate radio frequency energy and if not installed and used in accordance with the instruction manual, may cause interference to radio communications. It has been tested and found to comply with the limits of a Class A computing device, pursuant to Subpart J of Part 15 of FCC rules, which are designed to provide reasonable protection against such interference when operated in a commercial environment.

Operation of this equipment in a residential area is likely to cause interference in which case the user, at his or her own expense, will be required to take whatever measures may be required to correct the interference.

In addition to being certified as a Class A computing device, the SYP301 meets or exceeds requirements for safety in the US (UL 478 5th Edition), Canada (CSA C22.2 No. 154), and Europe (IEC 435 and VDE 0806). It also meets or exceeds the EMI/RFI requirements in the US and Canada (FCC47 CFR Part 15 Subpart J Class B) and in Europe (VDE 0871 Level A.

Additional copies of this manual or other Intel literature may be obtained from:

Intel Corporation
Literature Sales
P.O. Box 58130
Santa Clara, CA 95052-8130

Intel Corporation makes no warranty of any kind with regard to this material, including, but not limited to, the implied warranties of merchantability and fitness for a particular purpose. Intel Corporation assumes no responsibility for any errors that may appear in this document. Intel Corporation makes no commitment to update nor to keep current the information contained in this document.

Intel Corporation assumes no responsibility for the use of any circuitry other than circuitry embodied in an Intel product. No other circuit patent licenses are implied.

Intel software products are copyrighted by and shall remain the property of Intel Corporation. Use, duplication, or disclosure is subject to restrictions stated in Intel's Software License Agreement, or in the case of software delivered to the U.S. government, in accordance with the software license agreement as defined in FAR 52.227-7013

No part of this document may be copied or reproduced in any form or by any means without prior written consent of Intel Corporation.

Intel Corporation retains the right to make changes to these specifications at any time, without notice. Contact your local sales office to obtain the latest specifications before placing your order.

The following are trademarks of Intel Corporation and its affiliates and may be used only to identify Intel products:

| | | | |
|---|---|---|---|
| Above | Im | iSBC | PC BUBBLE |
| BITBUS | iMDDX | iSBX | Plug-A-Bubble |
| COMMputer | iMMX | iSDM | PROMPT |
| CREDIT | Insite | iSXM | Promware |
| Data Pipeline | Intel | KEPROM | QueX |
| FASTPATH | intel | Library Manager | QUEST |
| GENIUS | intelBOS | MAP-NET | Programming |
| I2ICE | Intelevision | MCS | Quick-Pulse |
| i | inteligent Identifier | Megachassis | Ripplemode |
| im | inteligent Programming | MICROMAINFRAME | RMX/80 |
| ICE | Intellec | MULTIBUS | RUPI |
| iCEL | Intellink | MULTICHANNEL | Seamless |
| iCS | iOSP | MULTIMODULE | SLD |
| iDBP | iPDS | ONCE | UPI |
| iDIS | iPSC | OpenNET | VLSiCEL |
| iLBX | iRMX | OTP | 4-SITE |

MULTIBUS® is a patented Intel bus.

IBM is a registered trademark and AT is a trademark of International Business Machines, Inc.
Microsoft, MS, MS-DOS, and XENIX are registered trademarks and Multiplan is a trademark of of Microsoft Corporation.
UNIX is a trademark of AT&T Bell Laboratories.

Portions of this manual contain excerpts from the Key Tronic 84 Key PC AT Keyboard data sheet and Key Tronic Operator's Manual. Reprinted with permission of Key Tronic Corporation.

Copyright 1987, Intel Corporation

| REV. | REVISION HISTORY | DATE |
|---|---|---|
| -001 | Original Issue. | 04/87 |

# CONTENTS


GETTING STARTED
ShortCuts to Installation . . . . . xi
Manual Organization . . . . . xii
Symbols and Terms . . . . . xiii
Related Publications . . . . . xiii

CHAPTER 1
ABOUT THE SYP301
1.1 Introduction . . . . . 1-1
1.2 Standard Features . . . . . 1-1
1.3 Options . . . . . 1-2
1.4 System Board Overview . . . . . 1-2
1.5 External Components . . . . . 1-2
1.6 Software . . . . . 1-4
1.7 Revision Differences . . . . . 1-4

CHAPTER 2
INSTALLING EXPANSION OPTIONS
2.1 Removing the Cover . . . . . 2-2
2.2 80386-Based System Board . . . . . 2-6
2.2.1 Monitor Type . . . . . 2-9
2.2.2 32-Bit Memory Configuration . . . . . 2-9
2.2.3 ROM Size Selection . . . . . 2-12
2.2.4 Serial Communications Port Selection . . . . . 2-13
2.2.5 Parallel Printer Port Selection . . . . . 2-14
2.2.6 Printer Acknowledge Signal . . . . . 2-16
2.2.7 Keyboard Reset . . . . . 2-16
2.2.8 Math Coprocessor . . . . . 2-17
2.3 Replacing the Battery . . . . . 2-18
2.4 Installing the Math Coprocessor . . . . . 2-19
2.4.1 Installing the 80387 Math Coprocessor . . . . . 2-20
2.4.2 Installing the SBCMATH Module . . . . . 2-21
2.5 Expansion Board Installation Procedure . . . . . 2-21
2.6 Selecting an Expansion Slot . . . . . 2-25
2.7 Installing 32-Bit RAM Expansion Boards . . . . . 2-27
2.8 Replacing the Cover . . . . . 2-28
2.9 Changing the Power Cord Plug . . . . . 2-31

CHAPTER 3
CONNECTING THE INPUT/OUTPUT DEVICES
3.1 Connecting the Keyboard . . . . . 3-1
3.2 Connecting a Printer . . . . . 3-2
3.3 Recording Serial Numbers . . . . . 3-3

CHAPTER 4
STARTING THE SYSTEM
4.1 Checking Electrical Connections . . . . . 4-1
4.2 Power-On Self Test . . . . . 4-2
4.3 Running the Setup Program . . . . . 4-3
4.3.1 Step 1: Listing the System Options . . . . . 4-3
4.3.1.1 Floppy Diskette Drives . . . . . 4-4
4.3.1.2 Fixed Disk Drives . . . . . 4-4
4.3.1.3 Base Memory . . . . . 4-5
4.3.1.4 Extended Memory . . . . . 4-5
4.3.1.5 Video Adapter . . . . . 4-5
4.3.2 Step 2: Running the SETUP Program . . . . . 4-6
4.3.2.1 Setting the Date and Time . . . . . 4-7
4.3.2.2 Setting the Current Options . . . . . 4-8
4.3.2.3 SETUP Option Screens . . . . . 4-8
4.3.3 Step 3: Rebooting the System . . . . . 4-16
4.4 Readying the Fixed Disk . . . . . 4-17

CHAPTER 5
OPERATING THE DEVICES
5.1 Using the Keyboard . . . . . 5-1
5.2 Using the Disk Drives . . . . . 5-4
5.3 System Unit Cover Keylock . . . . . 5-4

CHAPTER 6
SETTING THE PROCESSOR CLOCK SPEED
6.1 Setting the Clock Speed at the Keyboard . . . . . 6-1
6.1 Setting the Clock Speed with Software . . . . . 6-2

APPENDIX A
RECORDING SERIAL NUMBERS

APPENDIX B
ERROR MESSAGES
B.1 Power-On Self Test (POST) Error Messages . . . . . B-1
B.1.1 Screen Messages . . . . . B-1
B.1.2 System Board Errors . . . . . B-4
B.2 SETUP Error Messages . . . . . B-6

APPENDIX C
MOVING THE SYSTEM SYP301

APPENDIX D
KEYBOARD TEMPLATES AND SPECIAL CHARACTER SETS
D.1 Accessing Keyboard Templates . . . . . D-1
D.2 Accessing Special Characters . . . . . D-2
D.3 Dvorak . . . . . D-3
D.4 French . . . . . D-5
D.5 German . . . . . D-7
D.6 Italian . . . . . D-9

D.7 Spanish . . . . . D-11
D.8 U.K. English . . . . . D-13
D.9 U.S. English . . . . . D-15

APPENDIX E
TECHNICAL DATA
E.1 System Unit Specifications . . . . . E-1
E.2 System Board Specifications . . . . . E-3
E.2.1 Integral Serial Port Specification . . . . . E-5
E.2.2 Integral Parallel Printer Port Specification . . . . . E-6
E.2.3 8-Bit Expansion Slots . . . . . E-7
E.2.4 16-Bit Expansion Slots . . . . . E-8
E.2.5 High-Speed 32-Bit RAM Expansion Slots . . . . . E-8
E.2.6 Keyboard Connector . . . . . E-10
E.2.7 Battery Connector . . . . . E-11
E.2.8 Keylock Interface . . . . . E-11
E.2.9 Power Connectors . . . . . E-12
E.3 Disk Drive Specifications . . . . . E-13
E.4 Keyboard Interface Specification . . . . . E-15

APPENDIX F
FIXED DISK SPECIFICATIONS

APPENDIX G
SERVICE INFORMATION
G.1 Services Provided . . . . . G-1
G.2 When You Call . . . . . G-1
G.3 Packaging Requirements . . . . . G-2
G.4 Shipping Address . . . . . G-2
G.5 Obtaining DRA or RRA Service . . . . . G-2

GLOSSARY

## TABLES

Table 2-1. Expansion Slot Types . . . . . 2-27
Table 4-1. Floppy-Diskette Drive Types . . . . . 4-4
Table 4-2. Fixed-Disk Drive Types . . . . . 4-5
Table 4-3. Base Memory Sizes . . . . . 4-5
Table 4-4. Primary Video Adapter Type . . . . . 4-6
Table 4-5. Fixed Disk Types . . . . . 4-11
Table B-1. Fatal System Board Error Beep Codes . . . . . B-5
Table B-2. Non-Fatal System-Board Error Beep Codes . . . . . B-6

Table E-1. General Specifications . . . . . E-1
Table E-2. AC Input Requirements . . . . . E-2
Table E-3. Power Supply Output Specifications . . . . . E-2
Table E-4. Power Consumption of System Board . . . . . E-3
Table E-5. System Current Requirements . . . . . E-3
Table E-6. System Board Memory Access Times . . . . . E-4
Table E-7. Integral Serial Port Connector Pin-Out Specification . . . . . E-5
Table E-8. Integral Printer Port Connector Pin-Out Specification . . . . . E-6
Table E-9. Pin-Out Specification for 8-Bit Expansion Slot . . . . . E-7
Table E-10. Pin-Out Specification for 16-Bit Expansion Slot Extension . . . . . E-8
Table E-11. Pin-Out Specification for 32-Bit RAM Expansion Slot . . . . . E-9
Table E-12. Keyboard Connector Pin-Out Specification . . . . . E-10
Table E-13. Battery Connector Pin-Out Specification . . . . . E-11
Table E-14. Keylock Connector Pin-Out Specification . . . . . E-11
Table E-15. 1.2MB Diskette Drive Specifications . . . . . E-13
Table E-16. Disk Controller Jumper Settings . . . . . E-14
Table E-17. Standard Disk Controller and Power Supply Connections . . . . . E-14
Table E-18. Keyboard Interface Connector Chart . . . . . E-15
Table E-19. Keyboard Scan Code Chart . . . . . E-16
Table F-1. 40MB Fixed Disk Specifications . . . . . F-1
Table F-2. 80MB Fixed Disk Specifications . . . . . F-1
Table F-3. 140MB Fixed Disk Specifications . . . . . F-1

## FIGURES

Figure 1-1. System Board Bus Structure and I/O Devices . . . . . 1-3
Figure 2-1. Disconnecting Power Cords and Cables . . . . . 2-3
Figure 2-2. Unlocking the Key Lock . . . . . 2-4
Figure 2-3. Removing the Cover Mounting Screws . . . . . 2-5
Figure 2-4. Removing the System Unit Cover . . . . . 2-6
Figure 2-5. System Board . . . . . 2-7
Figure 2-6. System Board Jumper Locations . . . . . 2-8
Figure 2-7. Jumper Options for Standard Board (512KB, 2MB, 4MB, and 10MB) . . . . 2-10
Figure 2-8. Jumper Options for 16MB RAM Option (512KB, 8MB, 10MB, and 16MB) . 2-11
Figure 2-9. Replacing the Battery . . . . . 2-19
Figure 2-10. Location of Pin 1 on the 80387 . . . . . 2-20
Figure 2-11. Installing the SBCMATH Module . . . . . 2-21
Figure 2-12. Removing the Expansion Slot Cover . . . . . 2-22
Figure 2-13. Removing a Board From Its Wrapper . . . . . 2-23
Figure 2-14. Seating the Board . . . . . 2-24
Figure 2-15. Completing Board Installation . . . . . 2-25
Figure 2-16. Expansion Slot Locations . . . . . 2-26

Figure 2-17. Positioning the Disk Drive Ribbon Cables . . . . . 2-28
Figure 2-18. Sliding the Cover onto the System Unit . . . . . 2-29
Figure 2-19. Replacing the Cover Mounting Screws . . . . . 2-30
Figure 2-20. Setting the Line Voltage Select Switch . . . . . 2-31
Figure 3-1. Connecting the Keyboard . . . . . 3-2
Figure 3-2. Connecting a Printer Power Cord and Signal Cable . . . . . 3-3
Figure 4-1. Setting the Line Voltage Select Switch . . . . . 4-1
Figure 4-2. Memory Map . . . . . 4-15
Figure 5-1. Keyboard . . . . . 5-1
Figure 5-2. Keylock . . . . . 5-5
Figure 6-1. Setting Deturbo Mode with Software . . . . . 6-2
Figure 6-2. Setting Turbo Mode with Software . . . . . 6-3
Figure A-1. Location of System Unit Serial Number . . . . . A-1
Figure A-2. Serial Number on Key . . . . . A-2
Figure A-3. Location of the Disk Controller Card Serial Number . . . . . A-3
Figure A-4. Location of the 32-bit Memory Expansion Board Serial Number . . . . . A-4
Figure D-1. Placement of a Keyboard Template . . . . . D-1
Figure D-2. Dvorak Keyboard Template . . . . . D-3
Figure D-3. Dvorak Special Characters . . . . . D-4
Figure D-4. French Keyboard Template . . . . . D-5
Figure D-5. French Special Characters . . . . . D-6
Figure D-6. German Keyboard Template . . . . . D-7
Figure D-7. German Special Characters . . . . . D-8
Figure D-8. Italian Keyboard Template . . . . . D-9
Figure D-9. Italian Special Characters . . . . . D-10
Figure D-10. Spanish Keyboard Template . . . . . D-11
Figure D-11. Spanish Special Characters . . . . . D-12
Figure D-12. U.K. English Keyboard Template . . . . . D-13
Figure D-13. U.K. English Special Characters . . . . . D-14
Figure D-14. U.S. English Keyboard Template . . . . . D-15
Figure D-15. U.S. English Special Characters . . . . . D-16
Figure E-1. Power Connector Pins (PBA451213) . . . . . E-12
Figure E-2. Power Connector Pins (PBA149422) . . . . . E-13
Figure E-3. Keyboard to System Timing . . . . . E-18

# GETTING STARTED

To get your SYP301 system up and running, do the following:

- Install a video adapter (not supplied) and any other necessary expansion cards into the computer.
- Connect the keyboard and the video monitor (not supplied), and connect the power cords to electrical outlets. (See Chapter 3.)
- Turn on the computer and the monitor. After the power-on self test completes successfully, install the operating system and run the setup program (see Chapter 4).

If you are familiar with desktop computers, you may prefer to use the "Shortcuts to Installation" located in this section. The Shortcuts are an abbreviated list of procedures for installing and setting up the SYP301. Otherwise, use the more detailed information found in Chapters 2 through 6 to install and set up the SYP301.

## SHORTCUTS TO INSTALLATION

**1** Remove the cover from the system unit. (See Section 2.1.)

**2** Jumper system board pins E10-E11 if you are using a monochrome monitor (E11-E12 are already jumpered for a color monitor). (See Section 2.2.1.)

**3** Install an appropriate video adapter (none is supplied). Refer to the documentation accompanying the video adapter for installation instructions.

**4** Install any other boards that you intend to use. Slots 6 and 7 are special slots in which Intel 32-bit expansion boards can be installed. These two slots can also contain 8-bit boards, such as those used in IBM PCs and XTs, but they cannot contain 16-bit boards designed for the IBM AT. (See Sections 2.4 through 2.6.)

**5** Record the serial numbers of the boards you have installed. (See Appendix A.)

**6** Replace the cover. (See Section 2.7.)

**7** Connect the keyboard, a monitor (not supplied), and any other devices you need (such as a printer) to the computer. (See Chapter 3.)

**8** Record the serial numbers of your system components. (See Appendix A.)

**9** Ensure the Line Voltage Select switch is set correctly. (See Section 4.1.)

**10** Turn on the system. (See Section 4.2.)

11 After the power-on self test completes, adjust the monitor as necessary.

12 Run the setup program. (See Section 4.3.)

13 If your system contains a fixed disk, format the disk and install the operating system of your choice. Refer to your operating system documentation for further instructions.

Installation is now complete.

## MANUAL ORGANIZATION

This manual is designed to help OEMs understand the SYP301 and provide appropriate end-user documentation for their applications. As an OEM, you can obtain the text of this manual (in ASCII format) and the artwork, so that you can include the same material in your in your end-user documentation. Contact your Intel representative for more information.

This manual has six chapters and seven appendixes, as follows:

| | |
|---|---|
| Chapter 1 | Presents an overview of the SYP301 system. |
| Chapter 2 | Gives instructions for installing boards in the system expansion slots. |
| Chapter 3 | Gives instructions for connecting external devices such as keyboard. |
| Chapter 4 | Contains information and procedures for starting the SYP301 and running the setup program. |
| Chapter 5 | Provides useful information concerning the operation of the external devices. |
| Chapter 6 | Gives instructions for changing the processor clock speed, both from the keyboard and programmatically. |
| Appendix A | Helps you find and record equipment serial numbers. |
| Appendix B | Lists error messages you might receive. |
| Appendix C | Describes how to safely move the SYP301 system. |
| Appendix D | Contains facsimiles of keyboard templates and information concerning foreign language and special character usage with the SYP301. |
| Appendix E | Contains specifications and other detailed information about the hardware components. |

| | |
|---|---|
| Appendix F | Lists disk drive specifications. |
| Appendix G | Provides service information. |

## SYMBOLS AND TERMS

The following symbols and terms are used in this manual:

| | |
|---|---|
| * | In connector pin-out listings, indicates an active low signal, such as IOCHECK*. |
| <> | Indicates special keys on the keyboard. For example, <Enter> indicates the Enter key. |
| H | Denotes hexadecimal numbers. Addresses are listed in hexadecimal notation. |

## RELATED PUBLICATIONS

The following related publications can be purchased from Intel:

- *Introduction to the 80386* (Intel order number 231252)
- *80386 Programmer's Reference Manual* (Intel order number 230985)
- *80386 Hardware Reference Manual* (Intel order number 231732)
- *80386 System Software Writer's Guide* (Intel order number 231499)
- *iSBC 386AT User's Guide* (Intel order number 149568)

# CHAPTER 1
# CONTENTS

CHAPTER 1
ABOUT THE SYP301
1.1 Introduction . . . . . 1-1
1.2 Standard Features . . . . . 1-1
1.3 Options . . . . . 1-2
1.4 System Board Overview . . . . . 1-2
1.5 External Components . . . . . 1-2
1.6 Software . . . . . 1-4
1.7 Revision Differences . . . . . 1-4

# CHAPTER 1
# ABOUT THE SYP301

This chapter provides a brief overview of the SYP301 system, listing the standard features and options available with the system. It also discusses the kinds of software and add-on hardware that can be used with the SYP301.

**NOTE** This manual assumes the system board in the SYP301 has a product number of PBA451213. If the system board has a product number PBA149422-003 to -009, please read the section in this chapter called "Revision Differences." If the system board in your SYP301 does not have one of these numbers, contact your sales representative for documentation.

## 1.1 INTRODUCTION

The SYP301 is a powerful OEM computer system that combines the power of the 80386 microprocessor with the flexibility of the IBM AT architecture. The system is completely compatible with the IBM AT, enabling OEMs to add their own unique value by customizing the SYP301 with off-the-shelf boards, operating systems, and application software. In addition to being fully AT-compatible, the SYP301 contains a 16 MHz 80386 CPU, giving it a significant performance advantage over the AT. This combination of compatibility and performance makes the SYP301 an ideal platform for the OEM to add high-performance applications such as computer-aided design (CAD), computer-aided engineering (CAE), and advanced analytical tools.

## 1.2 STANDARD FEATURES

Every SYP301 system comes equipped with the following standard items:

- A system board with an 80386 processor running at 16 MHz
- 512K bytes resident memory on the system board
- Phoenix Technologies ROM BIOS
- Eight expansion slots
  - Two 8-bit slots (for PC/XT expansion boards)
  - Two 32-bit slots (for 32-bit memory expansion or 8-bit PC/XT boards)
  - Four 16-bit slots (for AT expansion boards)
- 220-watt power supply
- Integral serial port
- Integral printer port
- Expansion capability for up to five 5.25" peripheral devices
- 1.2MB, 5.25" floppy disk drive
- Floppy/fixed-disk drive controller

- AT-style keyboard
- SYP301 Installation and User's Guide (this manual)

## 1.3 OPTIONS

In addition to the items listed in the previous section, the following optional features are also available for the SYP301:

- Intel 80287 math coprocessor running at 10 MHz or an Intel 80387 math coprocessor running at 16 MHz
- 32-bit, 2MB or 8MB memory expansion boards (two slots maximum)
- fixed disks in various sizes

## 1.4 SYSTEM BOARD OVERVIEW

Figure 1-1 is an overview of the characteristics of the system board bus structure. The system board is a highly integrated advanced personal computer using Intel's iAPX 386 Central Processing Unit. It includes expansion bus capability that accepts enhancement features via plug-in optional boards.

## 1.5 EXTERNAL COMPONENTS

The open bus architecture of the SYP301 system board lets OEMs connect a wide range of inexpensive and popular IBM AT and AT-compatible peripherals directly to their systems. In addition, the system board includes two 32-bit slots which can contain Intel memory cards. The 32-bit slots give the 80386 processor a full 32-bit data path for accessing memory.

The SYP301 includes a low-profile, detachable keyboard with sculptured keytops and tactile feedback. The keyboard offers the popular 84-key PC AT key layout.

Although no video adapter or monitor is supplied with the SYP301, the system supports all models that are compatible with the IBM AT. This gives OEMs the option of supplying the type of monitor that best suits the needs of their customers.

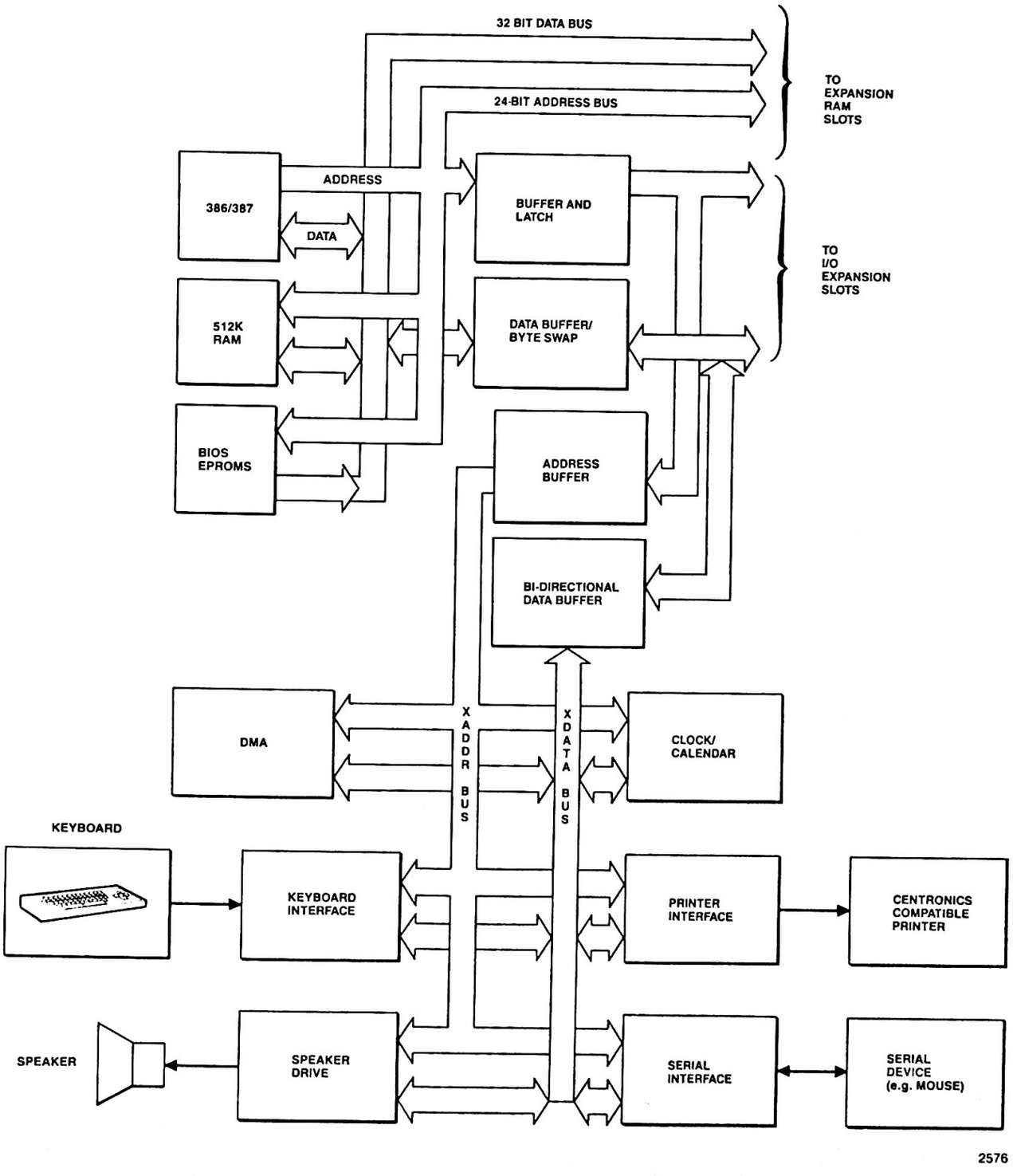


Figure 1-1. System Board Bus Structure and I/O Devices

## 1.6 SOFTWARE

The Intel 80386 is the latest microprocessor in the 8086 and 80286 families of Intel microprocessors. Therefore, it is compatible with an extremely large base of existing software. Although no operating systems or application software are supplied with the SYP301, the system has been tested with several operating environments, including PC-DOS, MS-DOS, UNIX, and XENIX. Application software that runs in those environments has also been tested.

## 1.7 REVISION DIFFERENCES

A system board numbered PBA149422-003 to -009 differs from PBA451213, the standard board discussed in this manual, in the following ways:

**PBA451213 (this manual)**

- Can use either an 80387 math coprocessor or its own SBCMATH module (containing an 80287)
- Has no jumper pins numbered 4, 5, or 6; uses the M146818AP component for the real-time clock

**PBA149422 (-003 and up)**

- Can use an SBCMATH module; cannot use an 80387
- Includes jumper pins 4, 5, and 6; jumpering pins 4 and 5 selects the M146818AP component for the real-time clock; jumpering pins 5 and 6 selects M146818P
- The pins on power connector J14 are reversed (see Appendix E for details)

CHAPTER 2
INSTALLING EXPANSION OPTIONS

2.1 Removing the Cover . . . . . 2-2
2.2 80386-Based System Board . . . . . 2-6
2.2.1 Monitor Type . . . . . 2-9
2.2.2 32-Bit Memory Configuration . . . . . 2-9
2.2.3 ROM Size Selection . . . . . 2-12
2.2.4 Serial Communications Port Selection . . . . . 2-13
2.2.5 Parallel Printer Port Selection . . . . . 2-14
2.2.6 Printer Acknowledge Signal . . . . . 2-16
2.2.7 Keyboard Reset . . . . . 2-16
2.2.8 Math Coprocessor . . . . . 2-17
2.3 Replacing the Battery . . . . . 2-18
2.4 Installing the Math Coprocessor . . . . . 2-19
2.4.1 Installing the 80387 Math Coprocessor . . . . . 2-20
2.4.2 Installing the SBCMATH Module . . . . . 2-21
2.5 Expansion Board Installation Procedure . . . . . 2-21
2.6 Selecting an Expansion Slot . . . . . 2-25
2.7 Installing 32-Bit RAM Expansion Boards . . . . . 2-27
2.8 Replacing the Cover . . . . . 2-28
2.9 Changing the Power Cord Plug . . . . . 2-31

# CHAPTER 2
# INSTALLING EXPANSION OPTIONS

The SYP301 must have boards installed to operate the disk drives and a monitor. It must also have boards for expanding the amount of available memory and for communicating over a local area network. This chapter gives instructions or directs you to instructions for installing some of the more common expansion boards as well as installing a math coprocessor and a battery. Table 2-1 lists the boards that are already installed.

The instructions in this chapter are designed primarily to help during the initial assembly of the SYP301, but they also contain information that can be helpful later when the system is moved and must be set up again, or when new components are added. This chapter covers the following topics:

**2.1 Removing the Cover**
This section shows how to access the expansion slots.

**2.2 The 80386-based System Board**
This section shows the locations of jumpers and defines the jumper settings.

**2.3 The Battery**
This section describes replacing the battery.

**2.4 Installing the Math Coprocessor**
This section describes installing both the 80287 and 80387 math coprocessors.

**2.5 Expansion Board Installation Procedure**
This is a generic procedure giving the basic steps for installing an expansion board.

**2.6 Selecting an Expansion Slot**
The SYP301 contains three types of expansion slots. This section discusses how to select the most appropriate slot for a board.

**2.7 Installing the 32-bit RAM Expansion Memory Board**
This section contains instructions in addition to those given in Section 2.4 for installing the 32-bit RAM expansion board.

**2.8 Replacing the Cover**
This section explains how to replace the system unit cover and set the line voltage switch to the correct position.

**2.9 Changing the Power Cord Plug**
This section gives the power cord color coding to assist you in replacing the power cord plug for use in areas with electrical codes other than those typically found in the United States.

## 2.1 REMOVING THE COVER

The system unit cover must be removed to install boards. This task can be performed with a medium-size, flat-blade screwdriver and a medium-size, Phillips screwdriver. Optionally, a 3/16-inch nutdriver can be helpful. To remove the cover, perform the following steps:

1 Turn off and disconnect any devices that are attached to the SYP301, such as a monitor. See Figure 2-1.

2 Turn off the power switch on the SYP301 and disconnect any power cords and cables. See Figure 2-1.

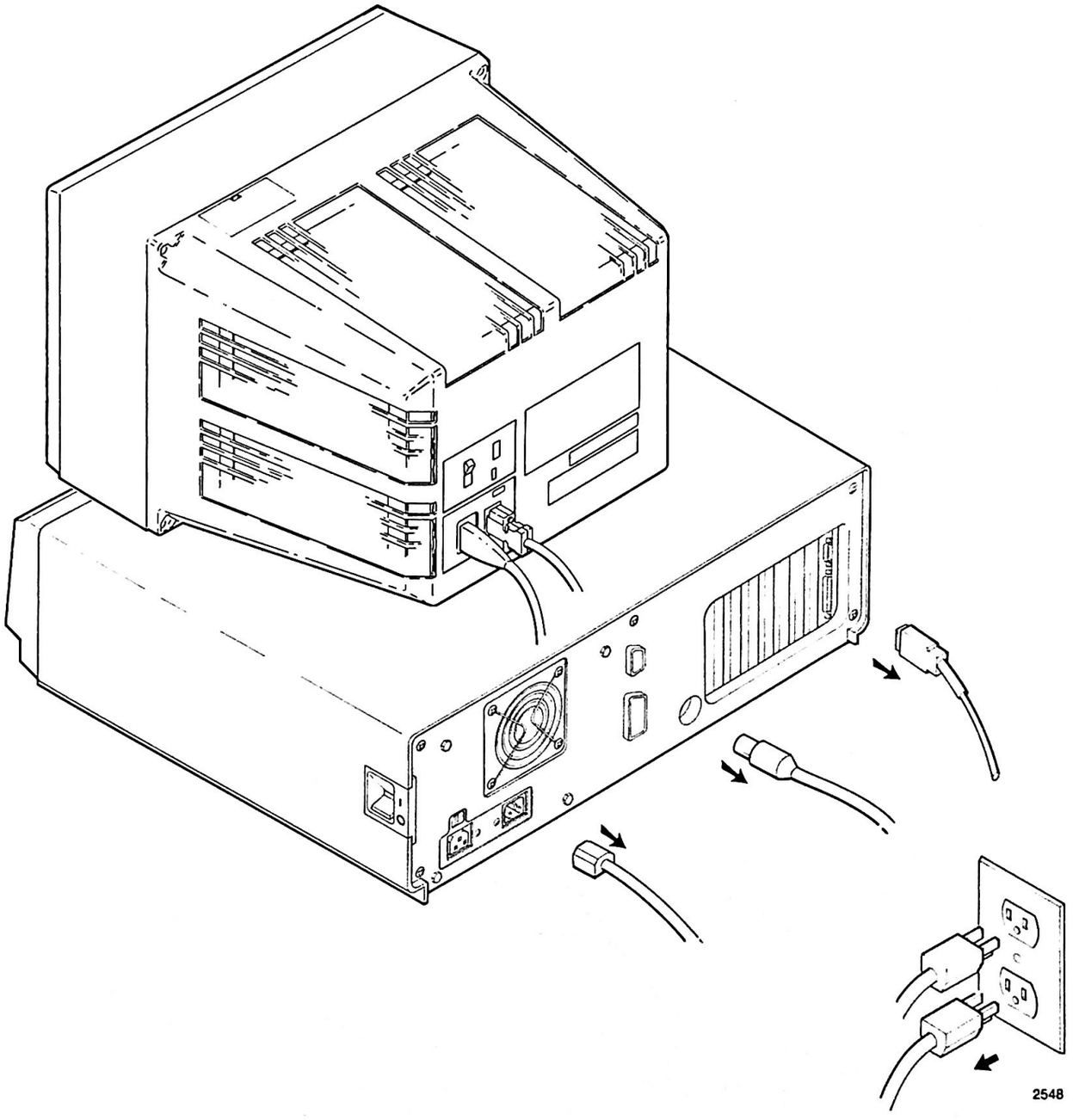


Figure 2-1. Disconnecting Power Cords and Cables

3 Unlock the key lock by turning the key clockwise. Then remove the key. See Figure 2-2.

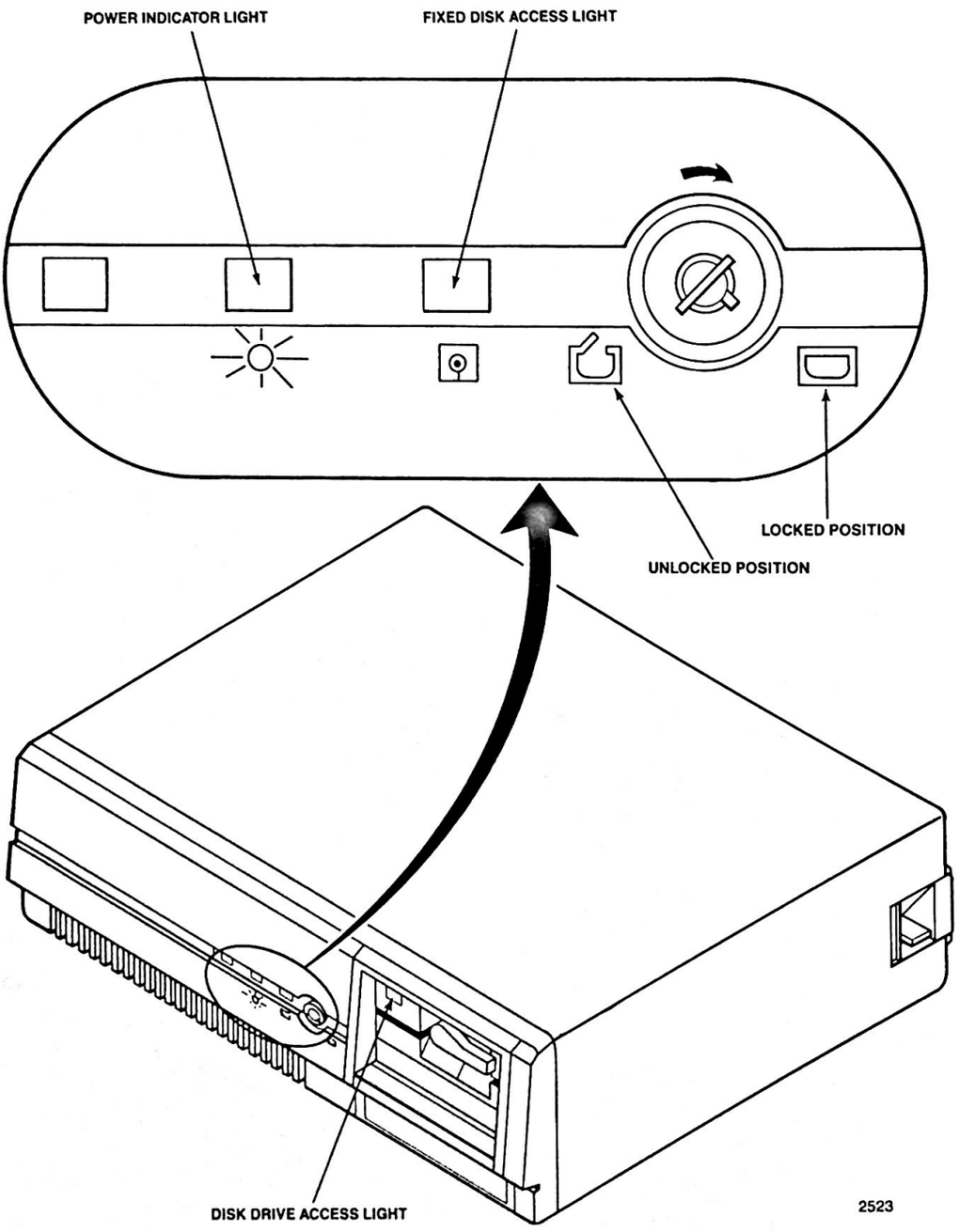


Figure 2-2. Unlocking the Key Lock

**4** Remove the five cover mounting screws. See Figure 2-3.

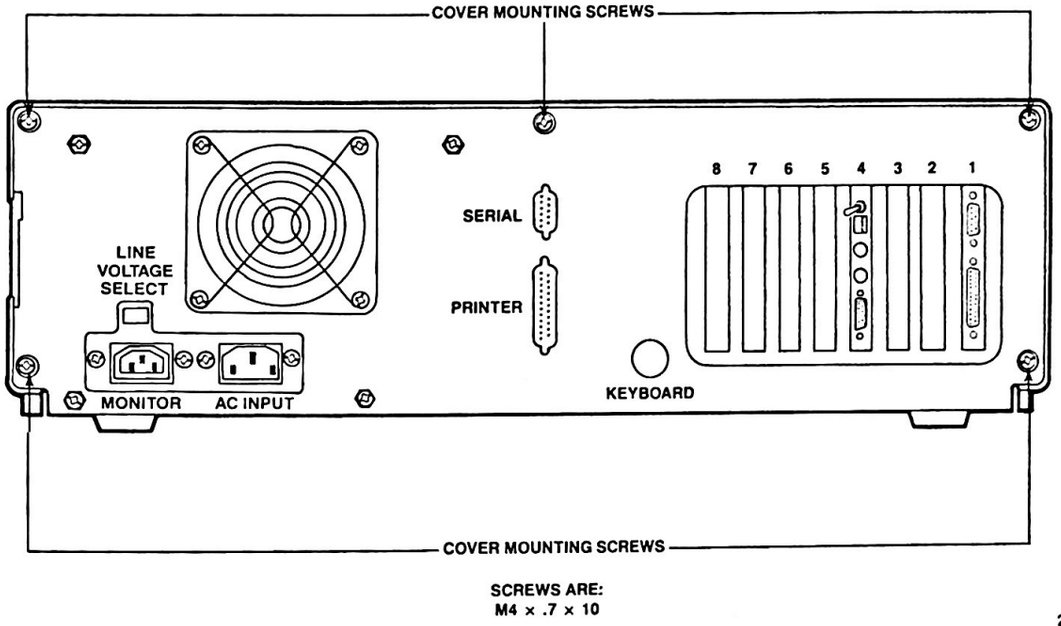


Figure 2-3. Removing the Cover Mounting Screws

5. Remove the cover by sliding it toward the front of the unit. See Figure 2-4.

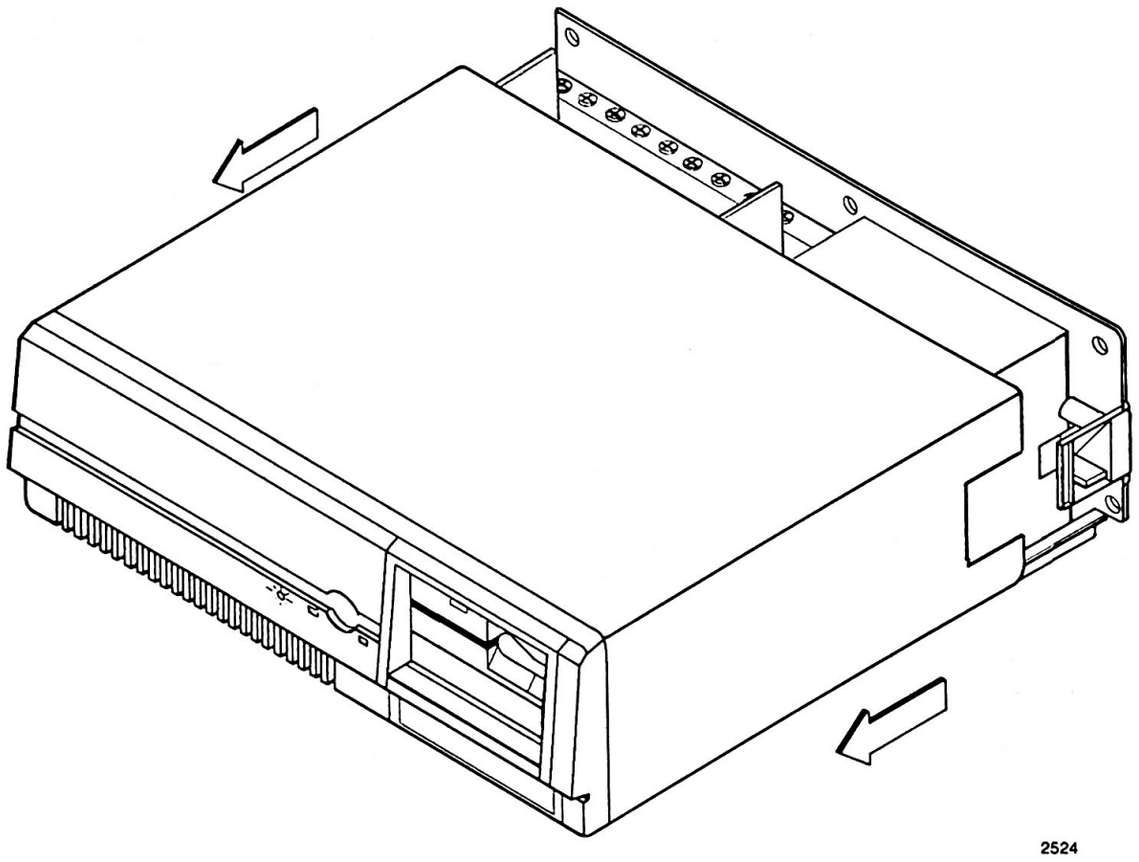


Figure 2-4. Removing the System Unit Cover

Now boards can be installed into the SYP301.

## 2.2 80386-BASED SYSTEM BOARD

Figure 2-5 shows the general layout of the system board. Figure 2-6 shows the locations of all the jumper blocks on the board. The pin numbers shown in this figure are silk-screened on the board so that the pins can be located easily. This chapter refers to the individual pins by these numbers.

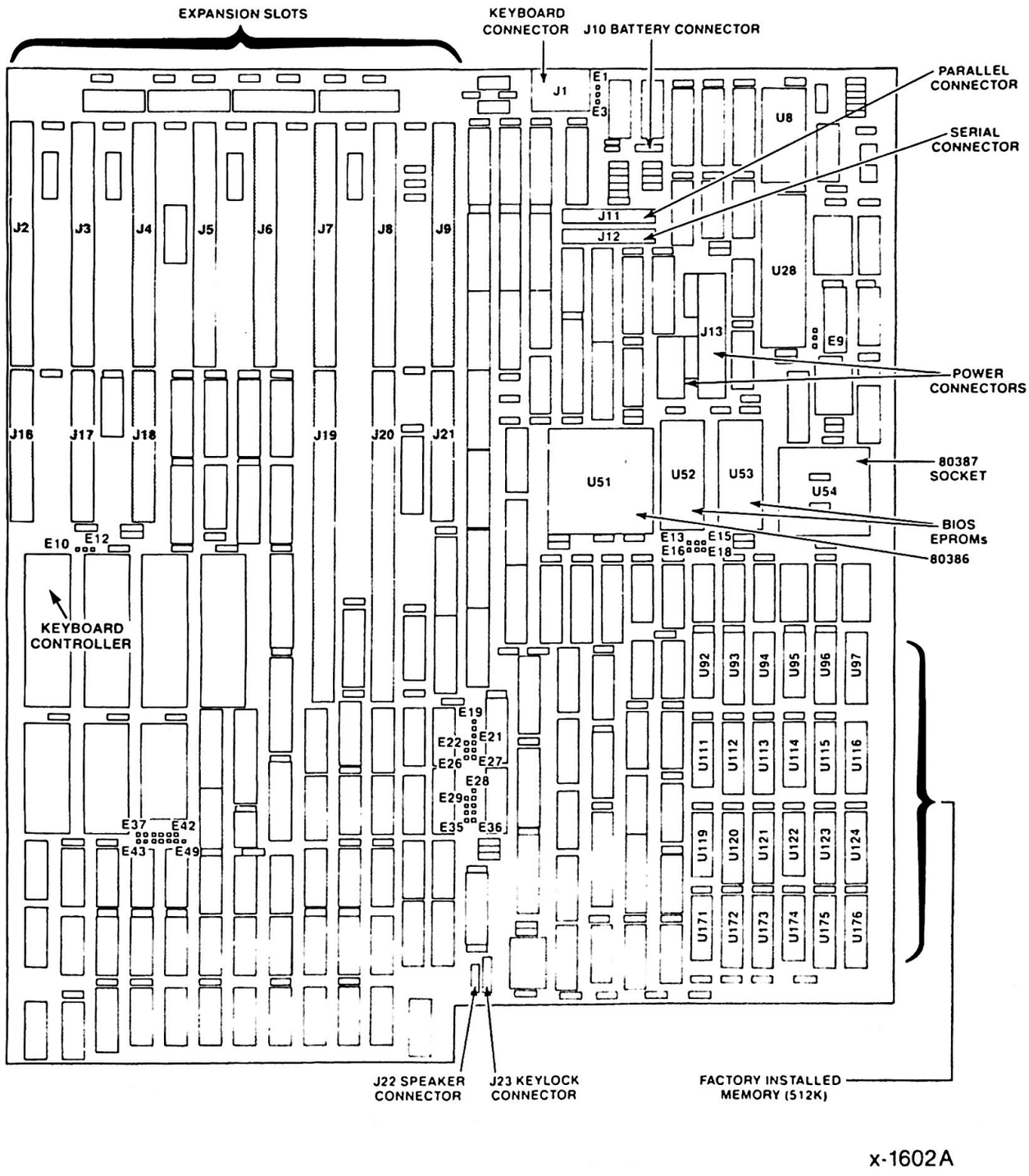


Figure 2-5. System Board

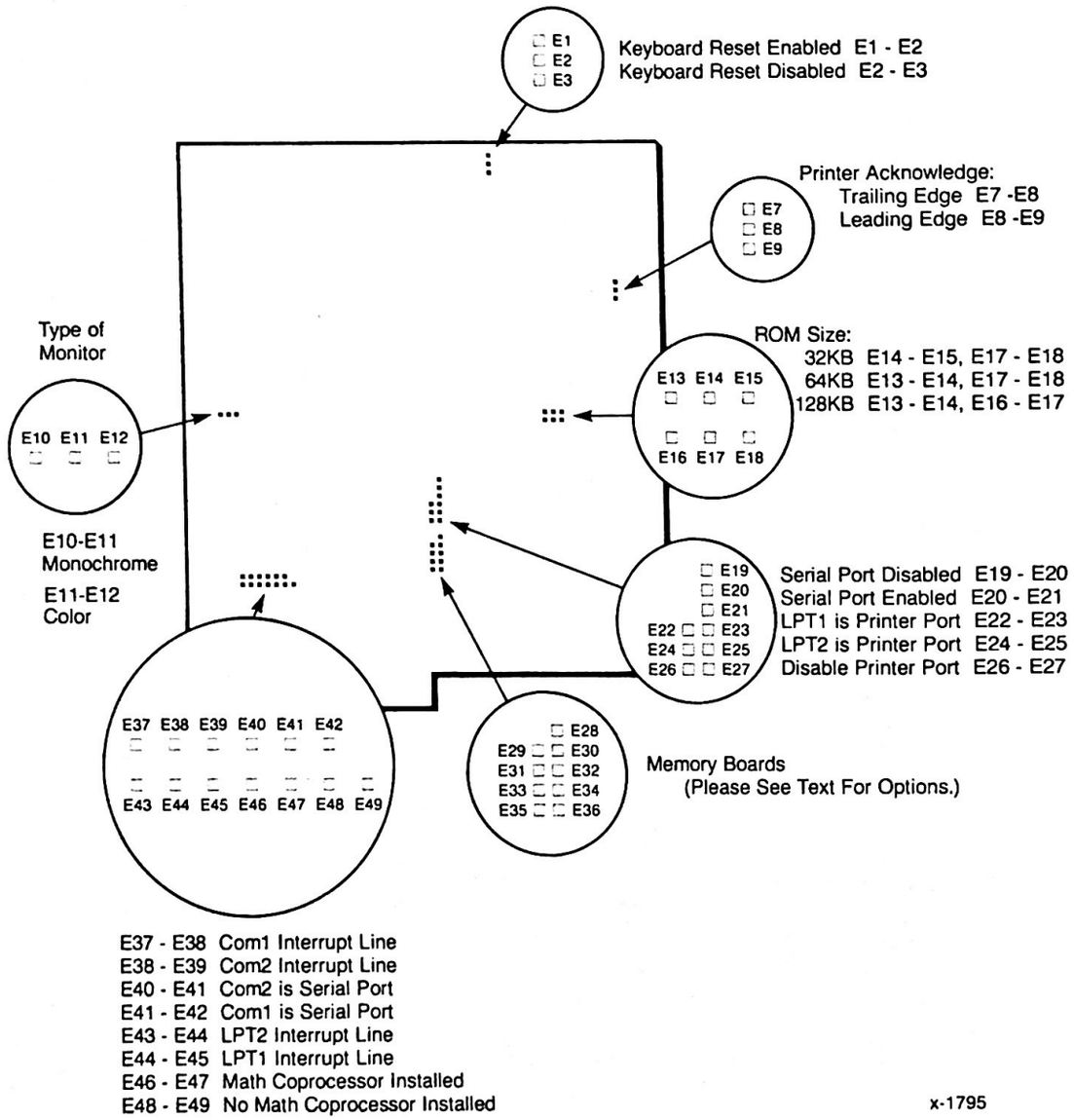


Figure 2-6. System Board Jumper Locations

All pins on the system board are jumpered at the factory for the system configuration that you ordered. You might need to change some of the jumpers depending on changes that you make or additional equipment that you add. The following sections explain jumpering options.

## 2.2.1 Monitor Type

Jumper pins E10 through E12 should be set depending on whether you will be using a color or monochrome monitor. The options are:

| Display | Install Jumper |
|---|---|
| color | 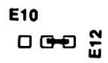  E11-E12* |
| monochrome | 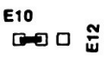  m-0767 E10-E11 |

Although no monitor is supplied with the SYP301, the factory setting is E11-E12 for the color monitor. If you choose a monochrome monitor (and a monochrome display adapter), change the jumper to E10-E11.

## 2.2.2 32-Bit Memory Configuration

Jumper pins E28 through E36 identify the amount of 32-bit memory installed. This memory includes the RAM on the system board, plus any Intel memory cards installed in slots 6 and 7.

These jumper selections apply only to 32-bit memory. If you install 16-bit memory cards, such as the Intel AboveBoard, to fill conventional memory to its 640K limit or to add expanded memory, you do not need to adjust the jumpers on the system board.

Figure 2-7 shows the jumpers for the 512K byte, 2M byte, 4M byte, and 10M byte options.

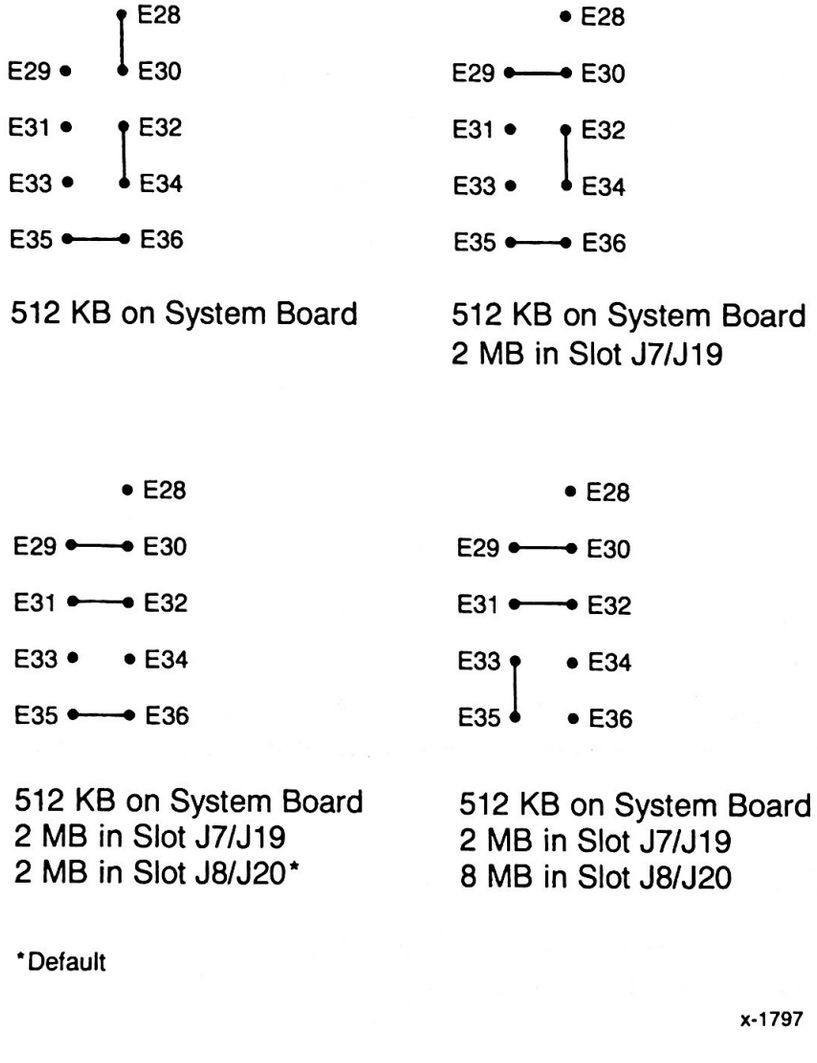


Figure 2-7. Jumper Options for Standard Board (512KB, 2MB, 4MB, and 10MB)

When you purchase the SYP301, the jumpers will be set at the factory to match the amount of 32-bit memory you order with your system. If you change the amount of 32-bit memory in the system later, change the jumpers as necessary to match the memory installed.

If you want to use two 8M byte memory boards or one 8M byte board without a 2M byte board, you must change the jumpers and replace one PAL device. The 8M byte boards ship with the PAL device and the instructions for changing the PAL. Figure 2-8 shows the jumper settings with the PAL installed.

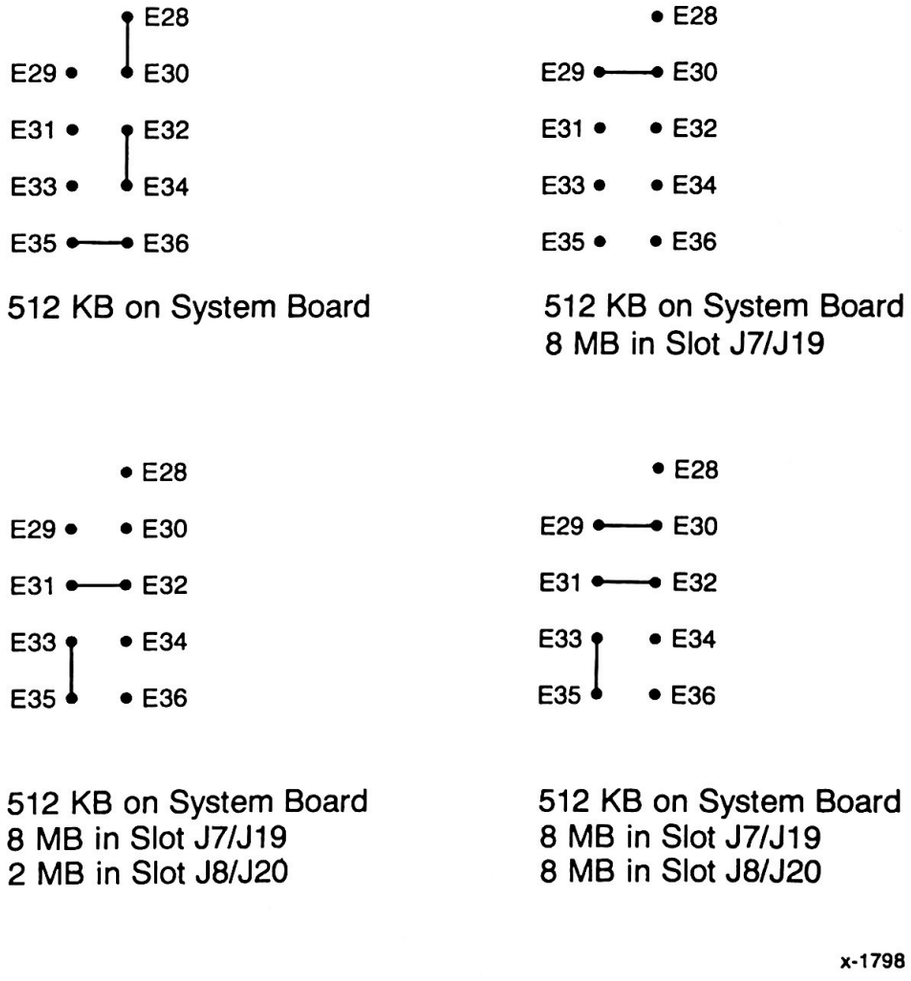


Figure 2-8. Jumper Options for 16MB RAM Option (512KB, 8MB, 10MB, and 16MB)

## 2.2.3 ROM Size Selection

Jumper pins E13 through E18 identify the size of ROMs used.

| EPROM Size | Install Jumpers | |
|---|---|---|
| | 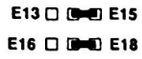  | |
| 32K bytes total<br>two 27128 ROMs | E14-E15 | E17-E18 |
| | 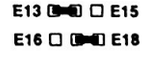  | |
| 64K bytes total<br>two 27256 ROMs | E13-E14* | E17-E18* |
| | 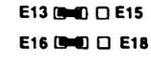  | |
| 128K bytes total<br>two 27512 ROMs | E13-E14 | E16-E17 |

m-0792

The factory setting is E13-E14 and E17-E18. Two 27256 ROMs are installed on the system board.

## 2.2.4 Serial Communications Port Selection

Selecting the serial communications port on the system board involves three sets of jumpers, one set to select the port number, one set to enable or disable the port, and one set to select the interrupt request (IRQ) line used with the port.

Jumper pins E40 through E42 select the port number. The serial port can be configured as either COM1 or COM2.

| Option | Install Jumper |
|---|---|
| | 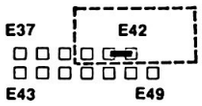 |
| Select COM1 | E41-E42* |
| | 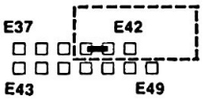 |
| Select COM2 | E40-E41 |

Jumper pins E19 through E21 enable or disable the serial port, regardless of the one selected.

| Option | Install Jumper |
|---|---|
| | |
| Disable serial port | E19-E20 |
| | m-0771 |
| Enable serial port | E20-E21* |

Pins E37 through E39 select the interrupt request line. This setting must correspond to the serial communications port you chose.

| IRQ Line | Install Jumper |
|---|---|
| IRQ4 (COM1) | 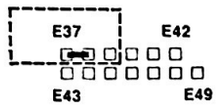 E37-E38* |
| IRQ3 (COM2) | 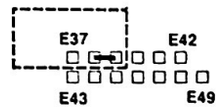 m-0772 E38-E39 |

The factory setting is COM1 enabled (E41-E42, E20-E21, and E37-E38). If you want to select COM2 or disable the serial port, set the jumpers accordingly.

## 2.2.5 Parallel Printer Port Selection

Selecting the parallel printer port involves two sets of jumper blocks, one to select the port and one to select the interrupt request (IRQ) line used with the port. Jumper pins E22 through E27 select the port. Jumper pins E43 through E45 select the interrupt request line.

Jumper pins E22 through E25 select the number of the system board's parallel printer port and enable the port. Jumper pins E26 and E27 disable the port. The parallel port can be configured as either LPT1 or LPT2.

**CAUTION** Only one of the following three jumper settings is permitted. Installing jumpers in more than one position could damage the system board.

| Option | Install Jumper |
|---|---|
| | 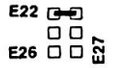  |
| Select LPT1 | E22-E23 |
| | |
| Select LPT2 | E24-E25* |
| | 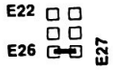  |
| Disable printer port | E26-E27 |

The factory setting is LPT2 (E24-E25). Move the jumper as indicated to select LPT1 or to disable the printer port.

Jumper pins E43 through E45 select the interrupt request line that will be used with the printer port. This jumper setting must correspond to the parallel printer port you chose.

| IRQ Line | Install Jumper |
|---|---|
| | 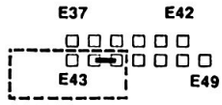  |
| IRQ7 (LPT1) | E44-E45 |
| | 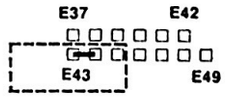  m-0773 |
| IRQ5 (LPT2) | E43-E44* |

The factory setting is IRQ5 (E43-E44). If you selected printer port LPT1, move the jumper to E44-E45 to select IRQ5.

## 2.2.6 Printer Acknowledge Signal

Jumper pins E7 through E9 select whether the leading or trailing edge of the printer acknowledge signal is used to trigger the interrupt line selected above.

| Option | Install Jumper |
|---|---|
| | |
| Leading edge of the acknowledge | E8-E9 |
| | m-0774 |
| Trailing edge of the acknowledge | E7-E8* |

The factory setting is to use the trailing edge of the acknowledge signal (E7-E8). Check your printer instructions to determine which acknowledge signal is needed. If necessary, move the jumper to E8-E9 to select the leading edge.

## 2.2.7 Keyboard Reset

Jumper pins E1 through E3 select whether the system sends a reset signal (RST* signal) to the keyboard when a system reset occurs. Enabling the keyboard reset is not necessary for the keyboard supplied with the SYP301, but it might be necessary for keyboards that are not compatible with the IBM AT keyboard. The options are:

| Option | Install Jumper |
|---|---|
| | |
| Keyboard reset enabled | E1-E2 |
| | m-0791 |
| Keyboard reset disabled | E2-E3* |

The factory setting is E2-E3 to disable the keyboard reset. To enable the keyboard reset signal, move the jumper to E1-E2.

## 2.2.8 Math Coprocessor

Jumper pins E46 through E49 select whether you have a math coprocessor installed on the system board. The math coprocessor can be either an 80387 component or an SBCMATH module, a special circuit board that contains an 80287 math coprocessor, circuitry that enables the 80287 to emulate the 80387, and pins that allow the board to plug into the 80387 socket.

**CAUTION** Only one of the following two jumper settings is permitted. Installing jumpers in both positions could damage the system board.

| Option | Install Jumper |
|---|---|
| | 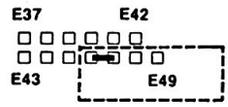  |
| Math coprocessor installed | E46-E47 |
| | m-0769 |
| Math coprocessor not installed | E48-E49 |

The factory setting depends on whether you ordered the system with or without the math coprocessor. If you remove or add the coprocessor later, set the jumpers accordingly. Removing the math coprocessor without changing this jumper will cause your system to operate improperly. Refer to section 2.4 for information about installing a math coprocessor.

## 2.3 REPLACING THE BATTERY

The battery is already installed and ready for use. It is compatible with the battery pack in the IBM AT (IBM part number 8286121). When you need to replace the battery, follow this procedure (see Figure 2-9).

1 Ensure the power is OFF to the system unit.

2 Remove the system unit cover (see Section 2.1).

3 Remove the screw holding the battery pack to the back panel of the system unit. See Figure 2-9 for the location of the battery.

4 Carefully pull the battery's power cord connector from the pins on the system board (see Figure 2-9).

5 Remove the battery pack and replace the batteries inside. Then reinstall the battery pack and fasten it to the back panel by replacing the screw you removed in step 3.

6 Carefully press the battery's power cord connector onto the pins on the system board. Notice that the connector will match the pins only when the single pin hole is on the left (when viewed from the front of the system unit). See the exploded view of the connector in Figure 2-9.

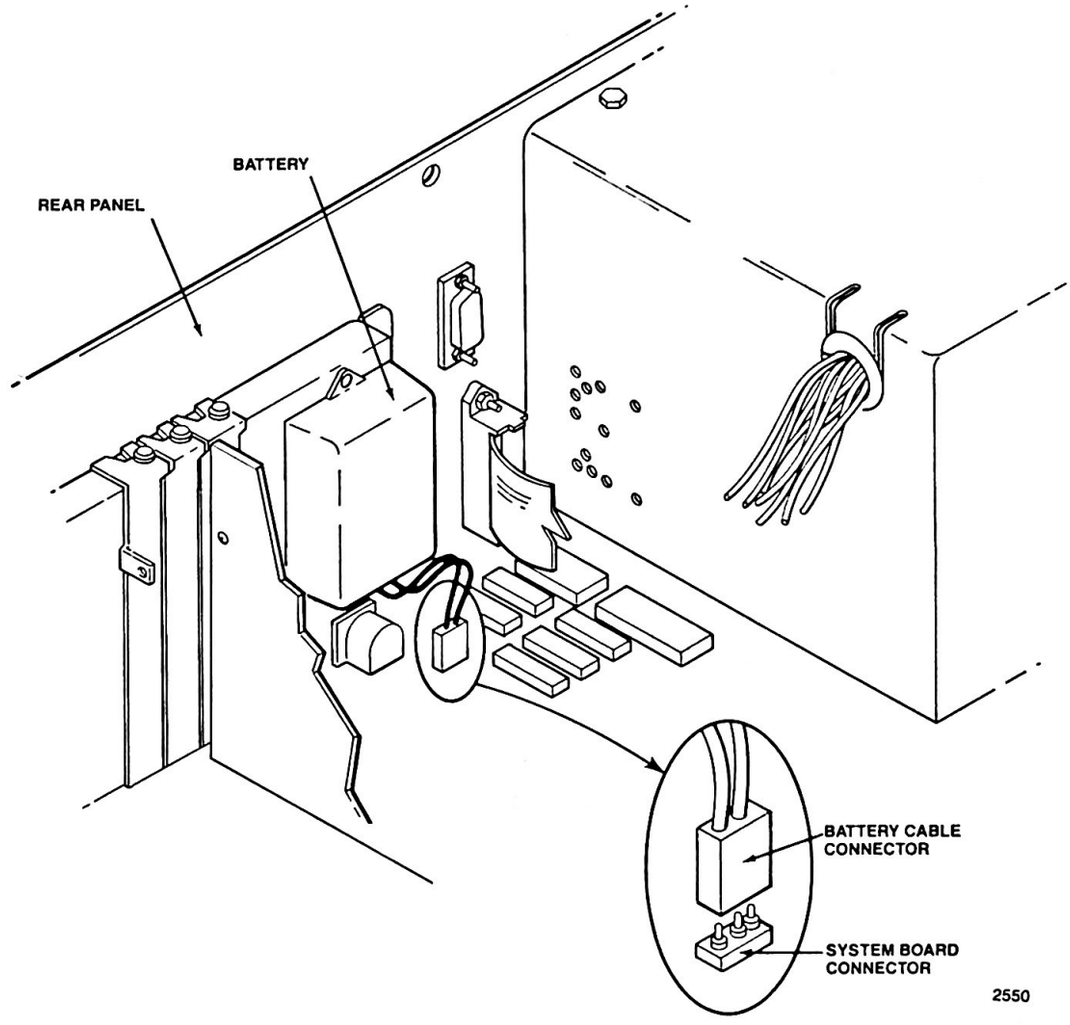


Figure 2-9. Replacing the Battery

7 Replace the system unit cover (see Section 2.9).

8 Rerun the SETUP program (see Section 4.3.2).

## 2.4 INSTALLING THE MATH COPROCESSOR

Socket U54 on the system board is available for inserting a math coprocessor. This socket can contain either an 80387 component or Intel's 80287-based SBCMATH module. The SBCMATH module contains an 80287 mounted on a special card with a connector that fits into the 80387 socket.

If you install either of the math coprocessors, you must set jumpers E46 through E49 on the system board to indicate that a math coprocessor is present. Refer to section 2.2.8 for instructions.

## 2.4.1 Installing the 80387 Math Coprocessor

To install an 80387 math coprocessor, first align the chip with socket U54, and make sure that pin 1 of the math coprocessor chip corresponds to pin 1 of the socket. Pin 1 of socket U54 is labeled. Pin 1 of the 80387 is designated with a dot on the corner of the chip or with the corner of the chip cut off. Then press the 80387 into socket U54. Figure 2-10 shows the location of pin 1 for the 80386 and 80387.

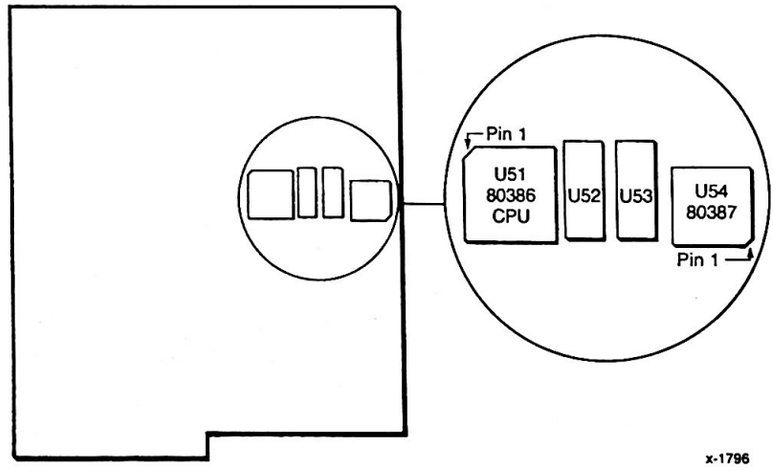


Figure 2-10. Location of Pin 1 on the 80387

**CAUTION** If the 80387 is not installed correctly, the 80387 and the system will be damaged. Note that the 80387 and 80386 have different orientations.

## 2.4.2 Installing the SBCMATH Module

The SBCMATH module contains an 80287 math coprocessor and has pins designed to fit into the 80387 socket U54. To install the SBCMATH module, first align the module as shown in Figure 2-11. In the correct alignment, the long edge of the SBCMATH module is closest to the edge of the system board and parallel to it. In this alignment, pin 1 of the 80287 component corresponds to pin 1 of socket U54.

Once the SBCMATH module is aligned, install the stress-relief standoffs and press the SBCMATH module into socket U54.

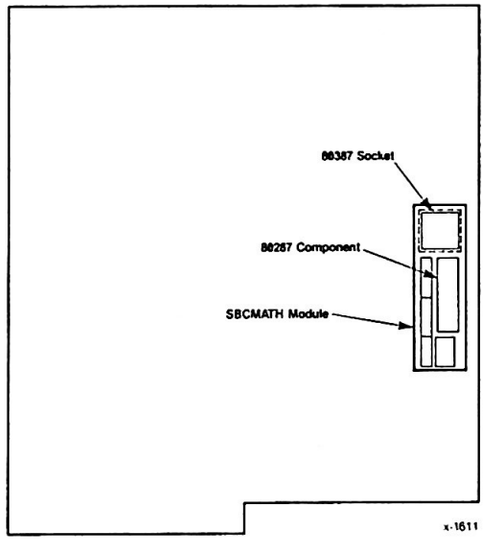


Figure 2-11. Installing the SBCMATH Module

## 2.5 EXPANSION BOARD INSTALLATION PROCEDURE

The boards of your SYP301 are extremely sensitive to electrostatic discharge (ESD) and always require careful handling. The precautions included in these installation instructions are to ensure that you install your boards without damaging them.

1 Make sure the system power is OFF during any board installation.

2 Select an appropriate slot in which to install your board. See Section 2.6, Selecting an Expansion Slot, for details.

3 Remove the expansion slot cover from the selected slot by removing the screw at the top. See Figure 2-12.

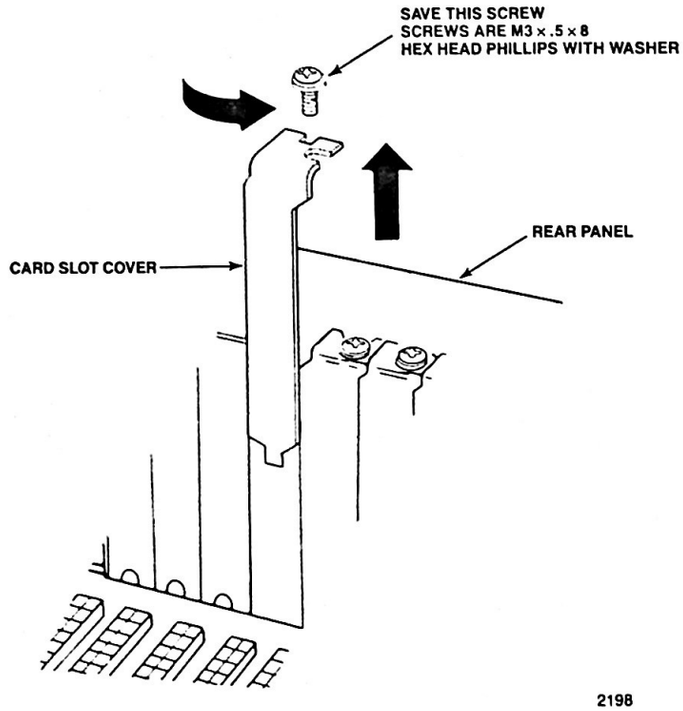


Figure 2-12. Removing the Expansion Slot Cover

4 Ensure that your workstation is properly grounded. Then bring yourself to zero voltage potential by securing your ESD wriststrap and connecting it to ground.

**CAUTION** Do not remove the board from its protective wrapper unless you are in an ESD-protected environment. It is strongly recommended that you perform all board installations at an ESD workstation. If such a workstation is not available, you can provide a minimum of ESD protection by attaching your wriststrap to chassis ground.

5 Record the board's serial number in Appendix A.

6 Remove the board from its wrapper, holding the board by the edges only. Avoid touching the board elements and the gold connectors. See Figure 2-13.

**CAUTION** Do not lay the board on any ungrounded surface after removing it from the protective wrapper. This includes laying it on the wrapper itself, which can contain voltage in its outside layers.

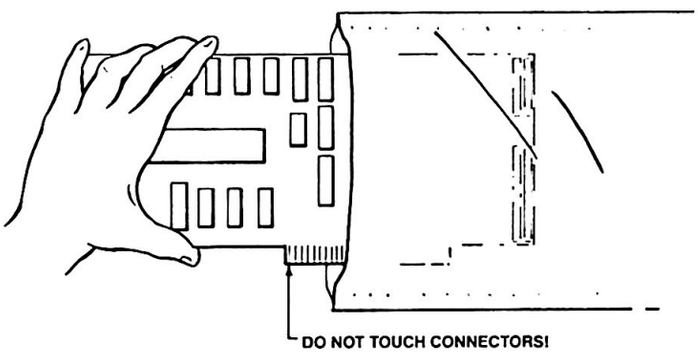


Figure 2-13. Removing a Board From Its Wrapper

7 Insert the board's connectors into the system board expansion slot by firmly pressing the board into the slot while holding the board by its top edge or upper corners. See Figure 2-14.

**NOTE** The **foot** of the board retaining bracket must fit into the slot in the bottom of the chassis.

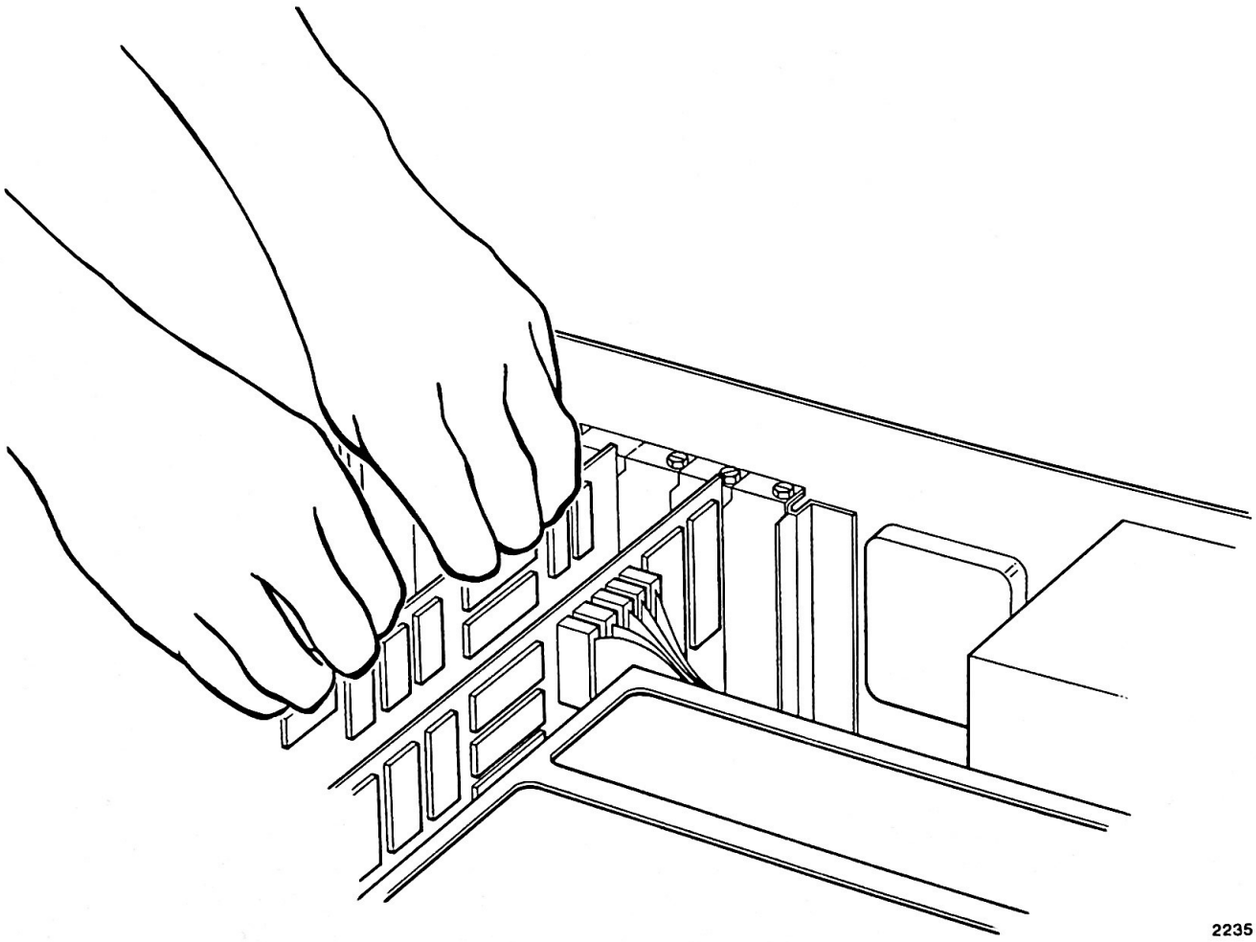


Figure 2-14. Seating the Board

8 Align the hole in the board retaining bracket with the screwhole in the expansion slot frame. The card retaining bracket fits into the space that was occupied by the expansion slot cover. Insert and tighten the screw. See Figure 2-15.

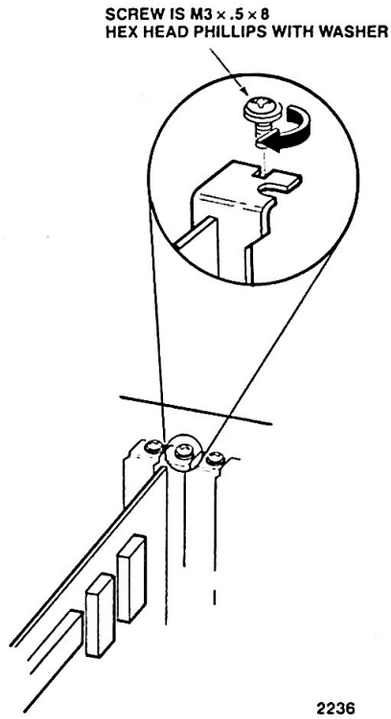


Figure 2-15. Completing Board Installation

Read the following sections for information concerning the selection of an appropriate slot and additional installation instructions for the particular boards you will be installing in the SYP301.

## 2.6 SELECTING AN EXPANSION SLOT

Expansion slots in IBM PC, XT, and AT computers and PC-compatibles have evolved in size, giving greater performance by expanding the number of bits of the data and address that can be accessed and sent through the bus. The PC and XT slots provide 8 data bits and 20 address bits. The AT slots provide 16 data bits and 24 address bits. The system board in the SYP301 contains both of these types of slots. In addition, it expands the bus further by supplying two slots with 32 data bits and 24 address bits. The system board contains eight expansion slots of the following types:

- Two 8-bit slots for use exclusively by PC-compatible expansion boards
- Four 16-bit slots for use by both AT-compatible and PC-compatible expansion boards

- Two 32-bit slots for use by both Intel 32-bit memory expansion boards and by PC-compatible expansion boards.

The two 8-bit slots can handle any expansion boards that work in the IBM PC or XT, including "drop cards" -- those boards that gain extra surface area by dropping down immediately after the 8-bit connector. The drop cards will not work in any 16-bit or 32-bit slot, because the longer slots interfere with the dropped portion of the boards.

The 16-bit and 32-bit slots will accept other kinds of 8-bit PC-compatible boards, but the 32-bit slots will not accept the 16-bit AT boards. The 32-bit slots are keyed to prevent 16-bit AT boards from being inserted.

Figure 2-16 identifies the slot locations on the system board. Table 2-1 lists the type of slot and the number of bits it addresses. This table also lists the recommended or required usage of each slot.

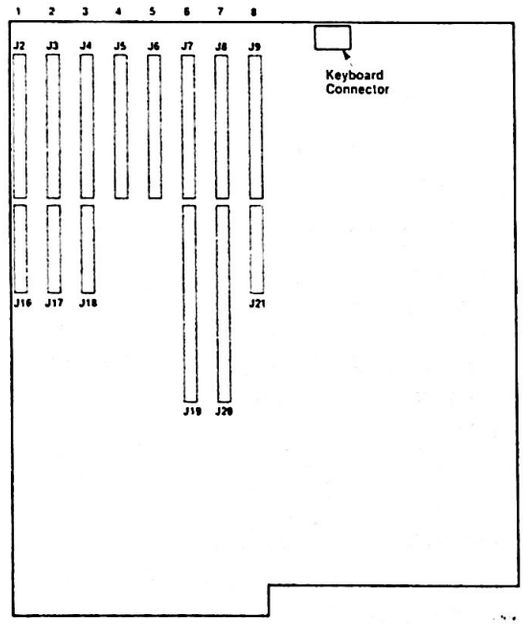


Figure 2-16. Expansion Slot Locations

Table 2-1. Expansion Slot Types

| Slot # | Data Bits | Address Bits | Type | Usage |
|---|---|---|---|---|
| 1 (J2/J16) | 16 | 24 | AT/PC (no drop cards) | Open |
| 2 (J3/J17) | 16 | 24 | AT/PC (no drop cards) | Open |
| 3 (J4/J18) | 16 | 24 | AT/PC (no drop cards) | Open |
| 4 (J5) | 8 | 20 | PC (including drop cards) | Video adapter |
| 5 (J6) | 8 | 20 | PC (including drop cards) | Open |
| 6 (J7/J19) | 32 | 24 | 32-bit/PC (no drop cards) | First 32-bit memory expansion board |
| 7 (J8/J20) | 32 | 24 | 32-bit/PC (no drop cards) | Second 32-bit memory expansion board |
| 8 (J9/J21) | 16 | 24 | AT/PC (no drop cards) | Disk controller (factory installed) |

## 2.7 INSTALLING 32-BIT RAM EXPANSION BOARDS

If you purchase one or two of the optional 32-bit RAM expansion boards, follow these instructions to set up and install the boards.

1. Set the memory configuration selection jumpers on the system board to match the number of 32-bit memory boards in your system. See Section 2.2.2, 32-Bit Memory Configuration for information about setting these jumpers. There are no jumpers or switches to set on the expansion boards.

2. Install the board (or boards) according to Section 2.5, Board Installation Procedure. The first board must be installed in slot 6 and the second board, if used, must be installed in slot 7.

3. When you start the system, you will see a message indicating that the configuration information is wrong. Run the setup program to inform the system of the extra memory you added. Refer to section 4.3 for more information.

Any 32-bit memory board that you install in the SYP301 is automatically configured for extended memory (memory whose addresses begin at 1M byte). The memory board in slot 6 uses the addresses beginning at 1M byte (100000H). The memory board in slot 7 uses addresses that immediately follow the memory on the first board.

For example, if you install a 2M-byte Intel memory board (MEM020 board) into slot 6, its memory will use addresses 100000H through 2FFFFFH. When you install a second card in slot 7, its memory addresses will start at 300000H.

## 2.8 REPLACING THE COVER

After all the boards are installed, replace the cover of the system unit.

1 Carefully press the ribbon cables down and out of the way. The cables should be no higher than the power supply. See Figure 2-17.

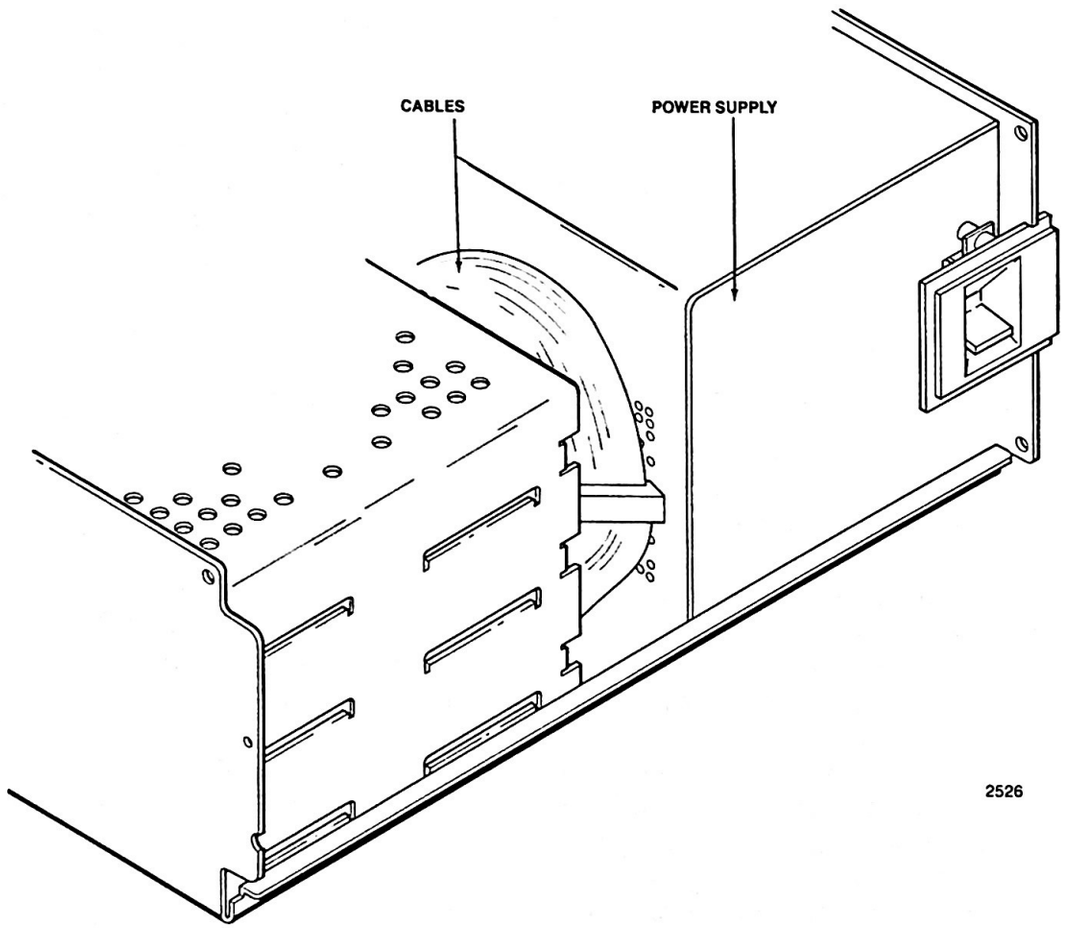


Figure 2-17. Positioning the Disk Drive Ribbon Cables

2 Slide the cover under the rail on the frame, lift the cover up against the rail, and slide it onto the system unit. See Figure 2-18.

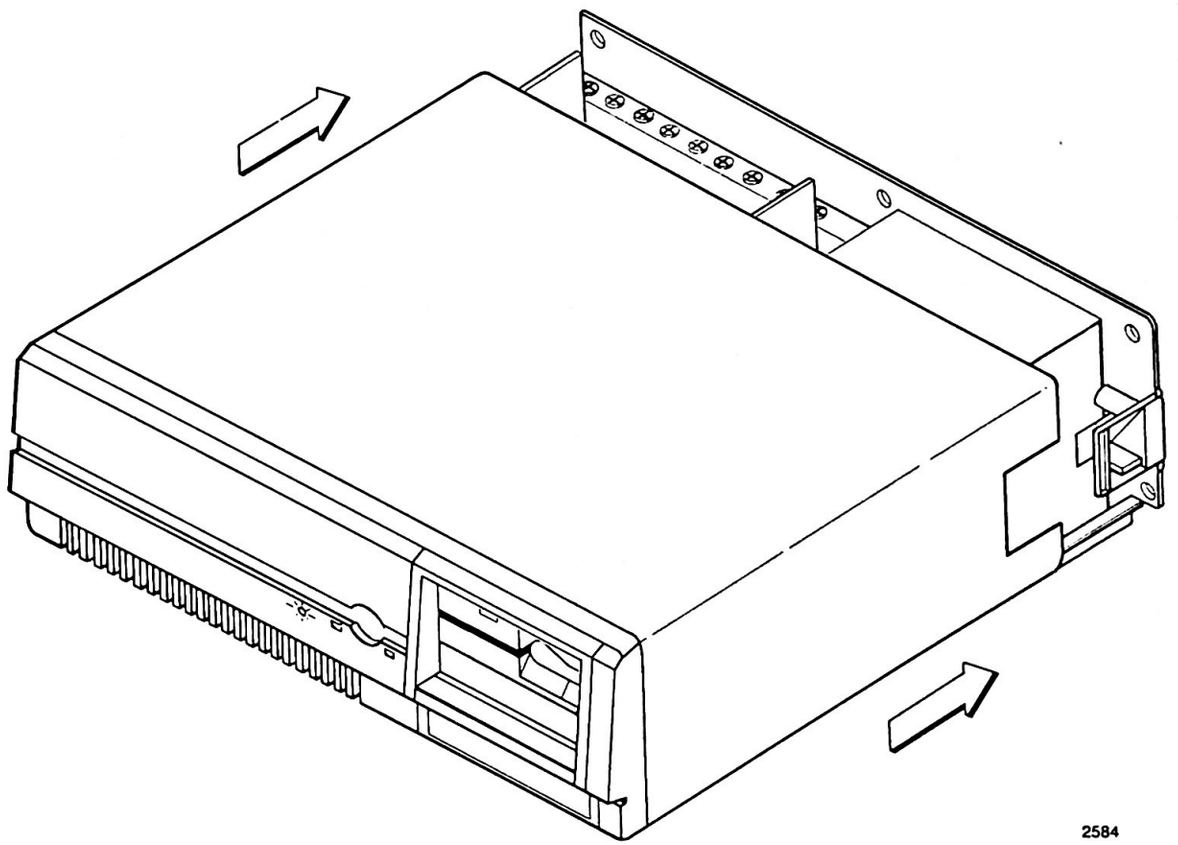


Figure 2-18. Sliding the Cover onto the System Unit

3 Replace the five cover mounting screws. See Figure 2-19.

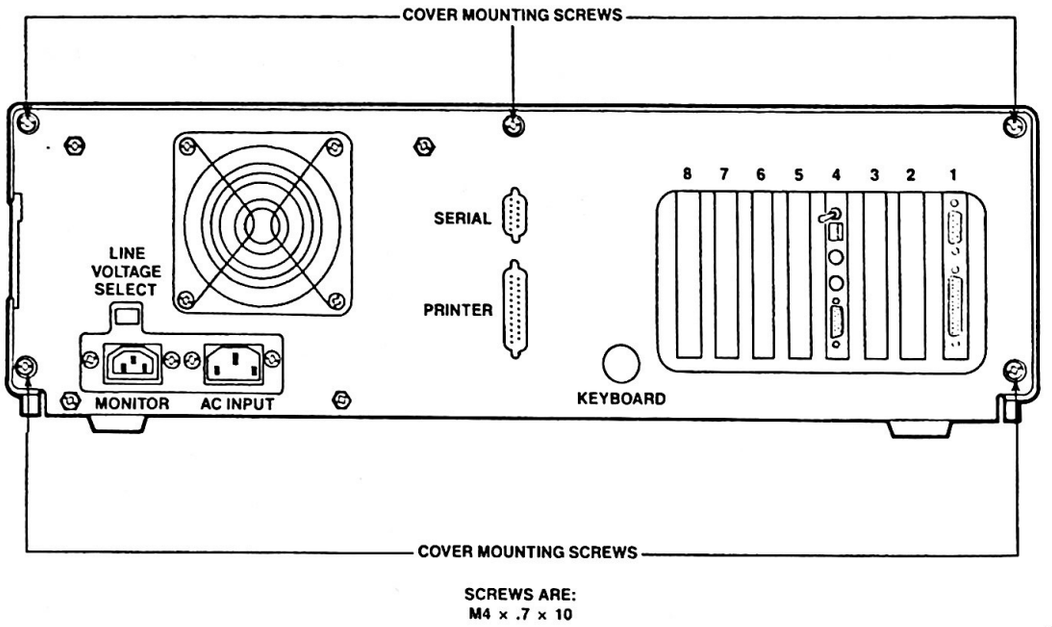


Figure 2-19. Replacing the Cover Mounting Screws

4. Before you connect the power cable to the system unit, set the 115V-230V Line Voltage Select Switch to the proper position. The proper setting is 115V for the United States and Canada, and 230V for Europe. See Figure 2-20.

**CAUTION** Your SYP301 system could be damaged if the 115V-230V Selector Switch is not set to the proper position.

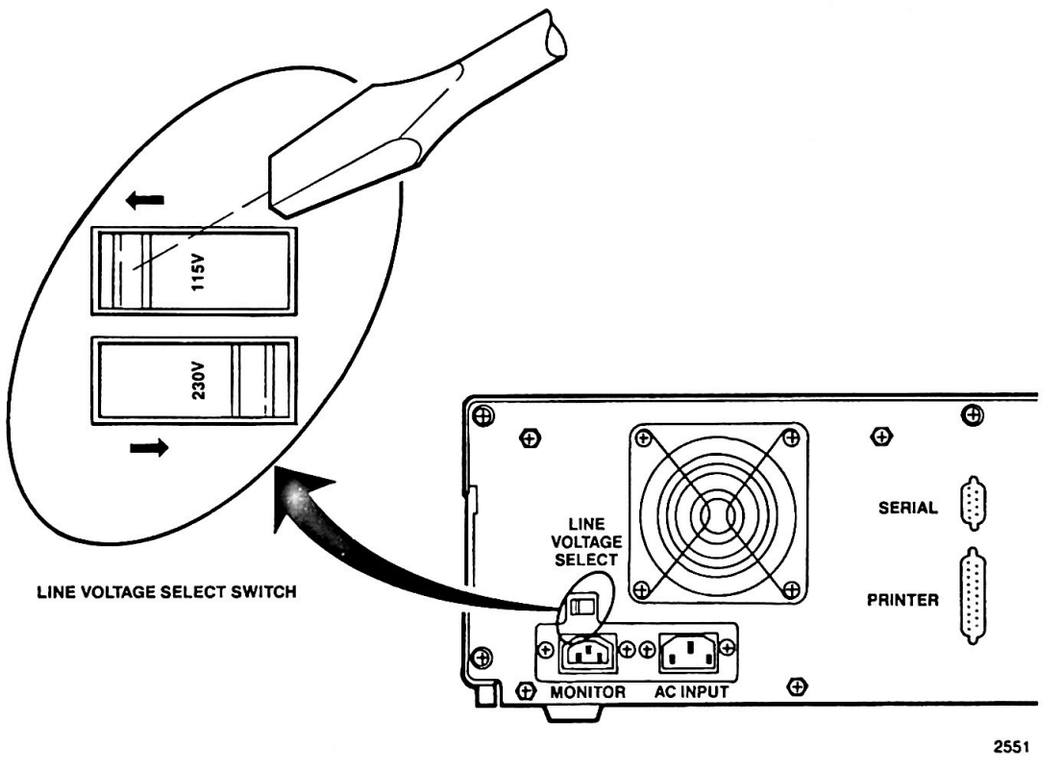


Figure 2-20. Setting the Line Voltage Select Switch

5 Reinsert the key and leave it in the unlocked position. See Section 5.5, The System Unit Cover Keylock, for more information on the keylock.

## 2.9 CHANGING THE POWER CORD PLUG

The plug on the system unit power cord might need to be replaced to conform to local electrical standards outside the United States.

**WARNING** Avoid possible electrical shock or damage to the system by having qualified technical personnel change the power cord plug. Check local electrical standards before selecting a power cord plug.

When changing the power cord plug, do the following:

- Connect the green- and yellow-striped wire to earth ground.
- Connect the light-blue wire to the neutral or grounded side of the power line.
- Connect the brown wire to the hot or ungrounded side of the power line.

Now go to Chapter 3, Connecting the Devices, for instructions on connecting the keyboard, a printer, and a monitor.

# CHAPTER 3
# CONTENTS


**CHAPTER 3**
**CONNECTING THE INPUT/OUTPUT DEVICES**

3.1 Connecting the Keyboard . . . . . 3-1
3.2 Connecting a Printer . . . . . 3-2
3.3 Recording Serial Numbers . . . . . 3-3

# CHAPTER 3
# CONNECTING THE INPUT/OUTPUT DEVICES

This chapter describes how to physically attach the keyboard to the system unit. Connecting a printer is also described.

Before using your system, you must also install a video adapter and a video monitor. These are not supplied with the SYP301, nor are installation instructions provided. Refer to the documentation that accompanies your video adapter and monitor for installation instructions.

## 3.1 CONNECTING THE KEYBOARD

Follow these steps to install the keyboard.

1. Ensure the power is off to the system unit.

2. Insert the keyboard cable connector into the round socket on the back of the system unit. The groove in the connector should be up. See Figure 3-1.

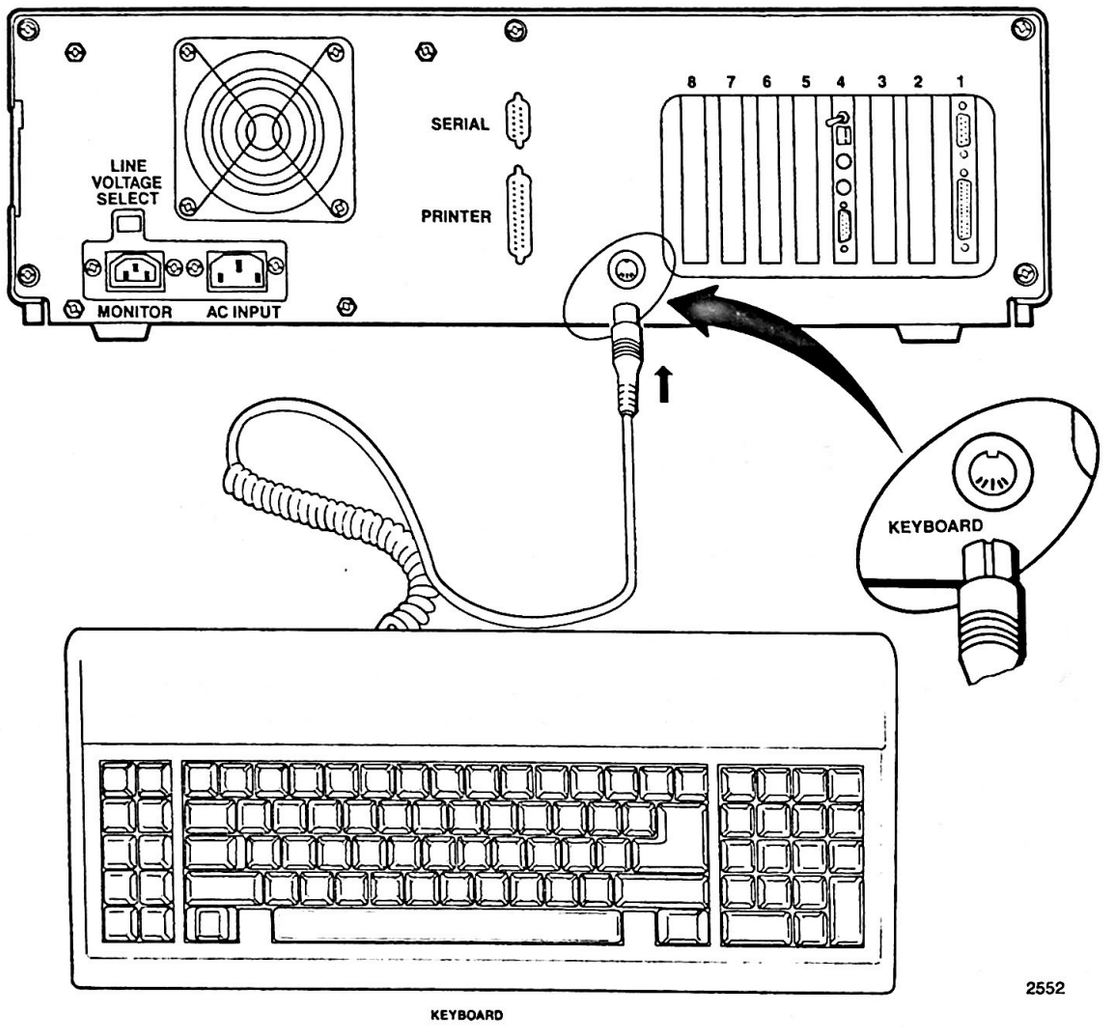


Figure 3-1. Connecting the Keyboard

## 3.2 CONNECTING A PRINTER

A printer can be attached to the SYP301 through either the integral printer (parallel) port or through other serial or parallel ports, such as those on an Intel Above Board PS/AT. Follow these steps to install a printer:

**1** Ensure the power is off to the system unit and to the printer.

2 Connect the printer signal cable to a printer (parallel) port (or serial port if the printer is a serial printer). If the cable has a ground wire, connect it as shown in Figure 3-2. If you need to construct your own printer cable, refer to Appendix E for the pin-out specifications of the parallel and serial ports.

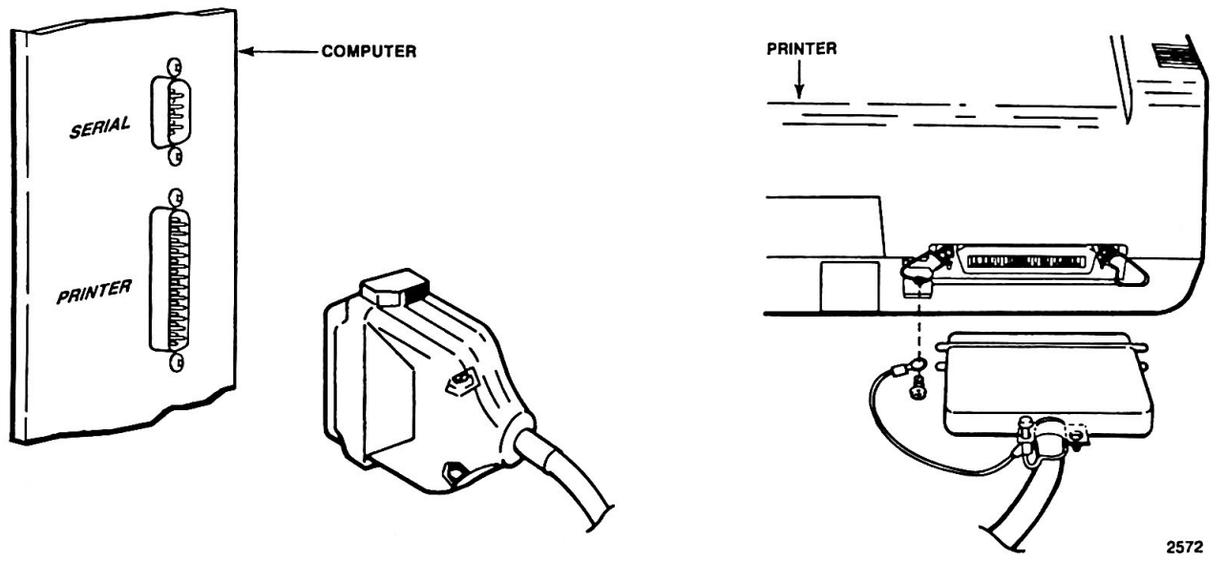


Figure 3-2. Connecting a Printer Power Cord and Signal Cable

3 Plug the printer power cable into a power outlet.

## 3.3 RECORDING SERIAL NUMBERS

To more easily locate your SYP301 in the event that it is lost or stolen, record the serial numbers of your system unit and major components. Serial numbers are also helpful when communicating with manufacturers concerning hardware upgrades. See Appendix A, Recording Serial Numbers, for instructions.

After you have recorded the serial numbers, turn to Chapter 4, Starting the System, for instructions on how to prepare the system for operation.

# CHAPTER 4
# CONTENTS


CHAPTER 4
STARTING THE SYSTEM
4.1 Checking Electrical Connections . . . . . 4-1
4.2 Power-On Self Test . . . . . 4-2
4.3 Running the Setup Program . . . . . 4-3
4.3.1 Step 1: Listing the System Options . . . . . 4-3
4.3.1.1 Floppy Diskette Drives . . . . . 4-4
4.3.1.2 Fixed Disk Drives . . . . . 4-4
4.3.1.3 Base Memory . . . . . 4-5
4.3.1.4 Extended Memory . . . . . 4-5
4.3.1.5 Video Adapter . . . . . 4-5
4.3.2 Step 2: Running the SETUP Program . . . . . 4-6
4.3.2.1 Setting the Date and Time . . . . . 4-7
4.3.2.2 Setting the Current Options . . . . . 4-8
4.3.2.3 SETUP Option Screens . . . . . 4-8
4.3.3 Step 3: Rebooting the System . . . . . 4-16
4.4 Readying the Fixed Disk . . . . . 4-17

# CHAPTER 4
# STARTING THE SYSTEM

This chapter describes the testing that the SYP301 performs automatically when turned on. It also describes the program that sets up the SYP301 system. Once the setup program has been run, the system will be ready for use.

## 4.1 CHECKING ELECTRICAL CONNECTIONS

**1** Before you connect the power cable to the SYP301 system unit, set the 115V-230V Line Voltage Select Switch to the proper position. The proper setting is 115V for the United States and Canada, and 230V for Europe. See Figure 4-1.

**CAUTION** Your SYP301 could be damaged if the 115V-230V Selector Switch is not set to the proper position.

**2** Check that all cables and power cords are properly connected.

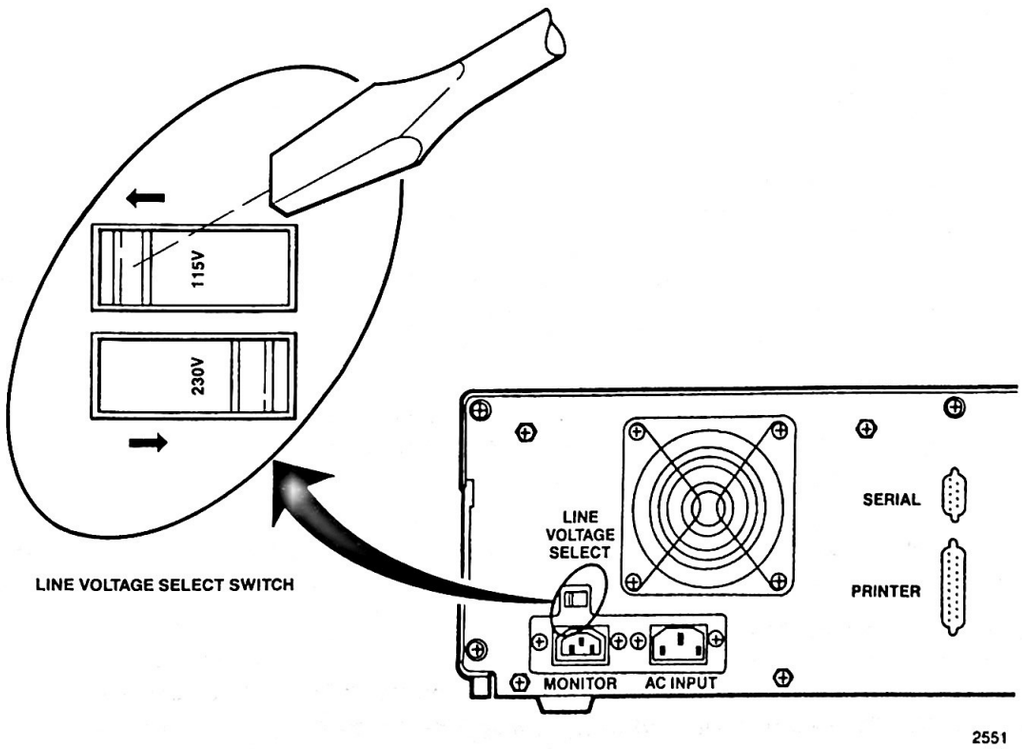


Figure 4-1. Setting the Line Voltage Select Switch

## 4.2 POWER-ON SELF TEST

The Power-On Self Test (POST) runs automatically and checks the 80386 processor, the keyboard, the display, system memory, and most peripheral devices connected to the SYP301 each time you turn on the system.

1. Turn on the monitor.

2. Remove the cardboard insert from the 5 1/4-inch floppy drive. The insert is used to protect the drive heads during shipment. Save the insert in case you need to move the SYP301 again.

3. Insert the operating system diskette in drive A.

4. Turn on the system power. The POST will begin by blinking the keyboard status lights on and off.

5. The POST memory size test displays the amount of memory it has tested. It displays the values in the upper-left corner of the screen as the test progresses. POST takes from 3 to 15 seconds to complete, depending on the amount of resident memory.

6. Adjust the monitor as necessary if the memory test is not displayed clearly.

7. When POST completes, the SYP301 will beep twice and display the following message:

```
Phoenix 80386 ROM BIOS Version x.yy
Copyright (c) 1985,1986 Phoenix Technologies Ltd
All Rights Reserved

00512K Base Memory, 00000K Expansion
Invalid configuration information - please run setup
program
Strike the F1 key to continue
```

**NOTE** Two beeps or combinations of three sets of beeps indicate a system board failure. Refer to Appendix B, Error Messages, to determine corrective action.

8. The "Invalid configuration information" message listed in Step 7 is displayed because you have not yet entered information about the system configuration. Press the F1 key.

After you press the F1 key, the SYP301 loads the operating system from the diskette in drive A. Additional information might be requested, depending on the operating system used. When the operating system finishes loading, follow the instructions in the next section to enter system configuration information.

## 4.3 RUNNING THE SETUP PROGRAM

With the SYP301, you receive a diskette containing the file SETUP.COM. This file is a program that runs under MS-DOS or PC-DOS to store system configuration information in the battery-backed memory of the real-time clock chip. The configuration information takes effect when you restart the system.

The following information is stored in the real-time clock/CMOS chip and can be set with the SETUP program:

- Date and time
- Number and capacity of diskette drives
- Number and type of fixed disks
- Amount of base memory
- Amount of expansion (extended) memory
- Type of primary video adapter

You should run the SETUP program when you configure a system for the first time, when you change the battery, and whenever you change any of the items listed above. If you don't run SETUP the first time you use the system, the system might not be able to fully utilize its capabilities.

Configuring your SYP301 with SETUP involves the following steps:

1. Listing the system options

2. Running the SETUP program

3. Rebooting the system

See Appendix B, Error Messages, for messages that can occur during the setup process.

### 4.3.1 Step 1: Listing the System Options

Before setting system options, you need to verify the kind of disk drives, memory, and video adapter that your system contains.

Your option information depends on the kind of system you ordered:

| | |
|---|---|
| Disk Drive A: | 1.2M (high-density) |
| Disk Drive B: | not installed |
| Fixed Disk Drive C: | depends on the options ordered |
| Fixed Disk Drive D: | not installed |
| System Base Memory | 512K |
| Expansion Memory | depends on the options ordered |
| Primary Video Adapter | user-dependent |
| Secondary Video Adapter | not installed |
| 80287 Detected | depends on the options ordered |

The following sections list available system options. Use these sections to determine your option information for entry into the SETUP program.

### 4.3.1.1 Floppy Diskette Drives

The SYP301 can have 1 or 2 floppy drives. There are several possible capacities. Circle the options that you have.

Table 4-1. Floppy-Diskette Drive Types

| Option | Type |
|---|---|
| Drive A | 1.2 M Capacity<br>360 K Capacity<br>720 K Capacity<br>1.44 M Capacity |
| Drive B | 1.2 M Capacity<br>360 K Capacity<br>720 K Capacity<br>1.44 M Capacity<br>Not Installed |

### 4.3.1.2 Fixed Disk Drives

The SYP301 can support 0, 1, or 2 fixed disk drives, subject to the limitations of the power supply (refer to Appendix E for power supply information). Fixed disk drives can have one of 47 types. Determining the type of fixed drives is explained in Section 4.3.2.5, Fixed Disk Drive Types.

Table 4-2. Fixed-Disk Drive Types

| Option | Type |
|---|---|
| Drive C | 1 through 47 ( )<br>Not Installed |
| Drive D | 1 through 47 ( )<br>Not Installed |

### 4.3.1.3 Base Memory

Base memory is the working read-write memory that is used directly by DOS. This memory is sometimes called conventional memory.

Table 4-3. Base Memory Sizes

| Option | Size |
|---|---|
| Base Memory Size | 512K bytes<br>640K bytes |

### 4.3.1.4 Extended Memory

Extended memory is that memory whose addresses start at 1M byte. Any Intel 32-bit memory boards installed in slots 6 and 7 contain extended memory. Extended memory is used by the DOS RAMDRIVE.SYS device driver (also called virtual disk) and some operating systems such as XENIX.

### 4.3.1.5 Video Adapter

There are three basic types of video adapters:

- Monochrome Display Adapters (MDA) and the Hercules Graphics Card (HGC) support monochrome monitors.
- Color Graphics Adapters (CGA) support color graphics monitors.
- Enhanced Graphics Adapters (EGA) support EGA, CGA, and monochrome monitors.

Table 4-4. Primary Video Adapter Type

| Option | Type |
|---|---|
| Primary Video Adapter | EGA<br>Color Graphic (40 columns)<br>Color Graphic (80 columns)<br>Monochrome |

## 4.3.2 Step 2: Running the SETUP Program

Now that you have verified the options information for your system configuration, start the SETUP program. The SETUP program performs the following operations:

- Displays date, time, and a series of screens that list current values for system options.
- Allows you to accept current values or enter different values for time, date, and system options.
- Instructs you to re-boot the system so that the settings take effect.

When you turn on the system before you have run SETUP the first time, the BIOS (Basic Input/Output System) sends a message that the configuration information is not valid, and requests that SETUP be run. Thereafter when the system is booted, it verifies the information you entered previously and issues a message if the data does not agree with actual system options.

**CAUTION** It is essential to configure your system with the correct fixed disk drive type because the system cannot independently verify the fixed disk drive type. Specifying an incorrect drive type could damage the data on the disk.

To run SETUP, load MS-DOS or PC-DOS, insert the SETUP diskette in drive A, and type:

```
A:SETUP
```
(and press <Enter>)

The following screen appears:

```
Phoenix Technologies Ltd.
Configuration Setup Program  Ver x.y
(c) Copyright 19xx

This program is used to store system
configuration information into battery
backed memory in your computer.  It is
necessary to run this program when
any memory, disk drives, or monitors
are added or removed from your system,
or to set battery maintained time
or date.

Press <Enter> to continue ...
```

#### 4.3.2.1 Setting the Date and Time

Press **<Enter>**. SETUP displays the date and time as shown in the next screen:

```
The battery maintained date is:

00/00/1900

The battery maintained time is:

00:00:51

Are these correct?
[Y or N]
```

If the date and time are correct, type **Y** and press **<Enter>** to indicate yes. SETUP displays current settings for all system options as described in the "Setting the Current Option" section of this chapter.

If the time or date is incorrect, type **N** and press **<Enter>** to indicate no. SETUP displays the following message:

```
The battery maintained date is:

00/00/1900

If this date is not correct, type
the correct date using numbers
separated by slashes.

For example type        05/21/1985 <enter>
meaning May 21, 1985.
```

Enter the correct date in the month/day/year format (mm/dd/yy or mm-dd-yy). SETUP then prompts you to enter the correct time in the hour:minute:second format (hh:mm:ss). It is not necessary to enter the seconds.

### 4.3.2.2 Setting the Current Options

When the date and time information has been entered correctly, SETUP displays the current option settings as in the follow example:

```
The following information is required for
correct operation of your computer.

The current settings of your options:

Disk Drive A:              is       1.2M
Disk Drive B:              is       360K
Fixed Disk Drive C:        is       Type 7
Fixed Disk Drive D:        is       NOT INSTALLED
System Base Memory         is       512K
Expansion Memory           is       0K
Prime Video Adapter        is       EGA
Math Coprocessor           is       80287

Are these options correct
(Reply Y or N then <enter>)

?
```

If the information is correct, type **Y** and press **<Enter>**. Then turn to Section 4.3.3, Step 3: Rebooting the System for further information.

If the current option settings are not correct, type **N** and press **<Enter>**. Then continue with the next section.

### 4.3.2.3 SETUP Option Screens

If your system is not configured as indicated in the current options screen, SETUP displays the first in a series of screens that list current setting choices for each option. At each option, SETUP asks:

```
Is this correct (Y or N).
```

To change any setting, type **N** and press **<Enter>**. SETUP prompts for the necessary information. If you type **Y** and press **<Enter>**, SETUP continues with the next screen.

## Diskette Drive Types

The first option screen asks for information on diskette drive types as follows:

```
Your diskette drive types are set to

Diskette Drive A:   is   1.2M
Diskette Drive B:   is   360K

Are these drive types correct  (Y or N)
?
```

Type **Y** and press **<Enter>** to accept the current information. Type **N** and press **<Enter>** to change the drive types. If you type **N**, SETUP displays the following prompts:

```
What type is disk drive A:

0 if this drive is not installed
1 if capacity is 360 kilobytes
2 if capacity is 1.2 megabytes
3 if capacity is 720 kilobytes
4 if capacity is 1.44 megabytes

(0,1,2,3 or 4) ?
```

Respond to the prompt with the correct type number and press **<Enter>**. SETUP then repeats the prompt for drive B. Diskette types 1 and 2 are 5.25-inch diskette drives; types 3 and 4 are 3.5-inch drives.

## Fixed Disk Drive Types

After you correct the diskette settings as necessary, SETUP displays the following screen:

```
Your fixed disk types are set to

Fixed Disk Drive C: is   TYPE 7
Fixed Disk Drive D: is   NOT INSTALLED

Are these drive types correct  (Y or N)
?
```

If listed information is correct, type **Y** and press **<Enter>** to accept it. Type **N** and press **<Enter>** to enter different fixed drive type information. In this case, SETUP issues the following prompts:

```
How many fixed disk drives are installed
in your system ?
(0, 1, or 2) ?
```

Enter the number of fixed disk drives in your system and press **<Enter>**.

Next, SETUP requests the information for the first drive, as follows:

```
What type is fixed drive C:

 (Enter drive type indicated by label
  affixed to drive)
For a list of disk types supported by
your computer enter a ? at prompt

(1 to 47 or ?)?
```

If you know the drive type associated with drive C, type that number and press **<Enter>**. If you do not know the drive type, type **?** and press **<Enter>**. SETUP will display a list of drive types and the specifications associated with each drive type. By comparing this display with the specifications in your disk drive's hardware reference manual, you will be able to pick the correct drive type.

Table 4-5 lists the drive type specifications you will see.

U52
696-7251

Dave Smith
INTEL CORP.
MAIL STOP.
HF3-46

Hillsboro
1617 617.24

5200 NE.
ELAM Young
Parkway

TEAC SD-3105. 175cc.
C H
1024 11 OPRE 0 LAND ZONE
COM
NONE WP COM. ALL/NONE

Table 4-5. F

| TYPE | CYLINDERS | HEADS | | | | |
|---|---|---|---|---|---|---|
| 1 | 306 | 4 | | | | |
| DR#1 2 | 615 | 4 | | | | |
| 3 | 615 | 6 | 300 | 615 | 17 | 30.6 |
| 4 | 940 | 8 | 512 | 940 | 17 | 62.4 |
| 5 | 940 | 6 | 512 | 940 | 17 | 46.8 |
| 6 | 615 | 4 | -1 | 615 | 17 | 20.4 |
| 7 | 462 | 8 | 256 | 511 | 17 | 30.6 |
| 8 | 733 | 5 | -1 | 733 | 17 | 30.4 |
| 9 | 900 | 15 | -1 | 901 | 17 | 112.0 |
| 10 | 820 | 3 | -1 | 820 | 17 | 20.4 |
| 11 | 855 | 5 | -1 | 855 | 17 | 35.4 |
| 12 | 855 | 7 | -1 | 855 | 17 | 49.6 |
| 13 | 306 | 8 | 128 | 319 | 17 | 20.3 |
| 14 | 733 | 7 | -1 | 733 | 17 | 42.5 |
| 16 | 612 | 4 | 0 | 663 | 17 | 20.3 |
| DR.#2 17 | 977 | 5 | 300 | 977 | 17 | 40.5 |
| 18 | 977 | 7 | -1 | 977 | 17 | 56.7 |
| 19 | 1024 | 7 | 512 | 1023 | 17 | 59.5 |
| 20 | 733 | 5 | 300 | 732 | 17 | 30.4 |
| 21 | 733 | 7 | 300 | 732 | 17 | 42.5 |
| 22 | 733 | 5 | 300 | 733 | 17 | 30.4 |
| 23 | 306 | 4 | 0 | 336 | 17 | 10.1 |
| 25 | 615 | 4 | 0 | 615 | 17 | 20.4 |
| 26 | 1024 | 4 | -1 | 1023 | 17 | 34.0 |
| 27 | 1024 | 5 | -1 | 1023 | 17 | 42.5 |
| 28 | 1024 | 8 | -1 | 1023 | 17 | 68.0 |
| 29 | 512 | 8 | 256 | 512 | 17 | 34.0 |
| ††30 | 615 | 2 | 615 | 615 | 17 | 10.2 |
| 35 | 1024 | 9 | 1024 | 1024 | 17 | 76.5 |
| NO 36 | 1024 | 5 | 512 | 1024 | 17 | 42.5 |
| 37 | 830 | 10 | -1 | 830 | 17 | 68.8 |
| 38 | 823 | 10 | 256 | 824 | 17 | 68.3 |
| 39 | 615 | 4 | 128 | 664 | 17 | 20.4 |
| 40 | 615 | 8 | 128 | 664 | 17 | 40.8 |
| 41 | 917 | 15 | -1 | 918 | 17 | 114.1 |
| 42 | 1023 | 15 | -1 | 1024 | 17 | 127.3 |
| 43 | 823 | 10 | 512 | 823 | 17 | 68.3 |
| 44 | 820 | 6 | -1 | 820 | 17 | 40.8 |
| 45 | 1024 | 8 | -1 | 1024 | 17 | 68.0 |
| 46 | 925 | 9 | -1 | 925 | 17 | 69.1 |
| †††47 | 699 | 7 | 256 | 700 | 17 | 40.6 |

† A "-1" in this column means that no write precompensation is used.
†† This type is available only on BIOS versions 3.06 or later.
††† On BIOS versions earlier than 3.06, this type is:

| | | | | | | |
|---|---|---|---|---|---|---|
| 47 | 1024 | 5 | -1 | 1024 | 17 | 42.5 |

The column headings in Table 4-5 are the same column headings you will see when SETUP displays the drive type information. These headings have the following meanings:

| | |
|---|---|
| **TYPE** | The drive type number that you must enter to specify the type of fixed disk you have. |
| **CYLINDERS** | The number of cylinders in the drive. |
| **HEADS** | The number of heads in the drive |
| **PRECOMP** | The number of the cylinder at which the drive begins performing write precompensation. |
| **LAND ZONE** | The number of the cylinder used for the head landing zone. |
| **SECTORS** | The number of sectors per track. |
| **SIZE MEGS** | The size of the drive in megabytes. |

You can use the SETUP drive-type list in two ways:

- If your fixed drive has a label that specifies a type code (1-47), use the list to confirm that SETUP supports your drive.
- If your fixed drive does not specify a type code, use the information on the list and your drive specifications to identify the drive type.

For example, you can verify that your drive is a type 7 if it has the following parameters:

| | |
|---|---|
| Cylinders | 462 |
| Heads | 8 |
| Precompensation Cylinder | 256 |
| Landing Zone | 511 |
| Sectors per track | 17 |
| Size (in megabytes) | 30.6 |

**NOTE** If the list does not include your fixed-disk type, you can still use SETUP to set system options, but you won't be able to use the full capacity of the fixed disk. In this case, choose the disk type that most closely matches the specifications for your fixed disk, making sure that the number of cylinders, number of heads, and disk capacity are less than or equal to your disk's values. Of course, picking a disk type for a smaller disk means that your disk will have a smaller usable capacity.

After you compare the SETUP display with the specifications for your fixed disk, enter the correct drive type and press **<Enter>**. The SETUP program then requests the same information for any other fixed disks in your system.

## Base Memory

After you enter the fixed disk information, SETUP displays a screen similar to the following one:

```
Base memory is that memory positioned
so as to be available to MSDOS programs.

System Base Memory is  512K

Is this correct  (Y or N) ?
```

As the display mentions, base memory is the amount of memory available to DOS. Base memory is sometimes called conventional memory. It is limited to a maximum of 640K bytes. The SYP301 is shipped with 512K bytes of base memory.

If the listed amount of base memory is correct, type **Y** and press **<Enter>**.

If your system contains a different amount of base memory, type **N** and press **<Enter>**. SETUP then issues the following prompt:

```
What is the total size of the base
memory installed in your system in K
    (Standard configurations are
     256, 512, or 640)
?
```

In response, enter the base memory size and press **<Enter>**.

## Extended Memory

After you correct the base memory information if necessary, SETUP displays the following information concerning extended memory:

```
Extended memory is positioned at
a high address and available to MSDOS
only for special functions.

Extended Memory is  0K

Is this correct  (Y or N) ?
```

When using the term *extended memory*, the SETUP program is referring to memory whose address range begins at 1 megabyte. Figure 4-2 illustrates the locations of extended memory, conventional (or base) memory, and expanded memory. Any Intel 32-bit memory boards in slots 6 and 7 add extended memory to the system.

If the information listed on the screen is correct, type **Y** and press **<Enter>**.

If your system contains a different amount of extended memory than listed, type **N** and press **<Enter>**. The SETUP program prompts for the size, as follows:

```
What is the total size of the extended
memory installed in your system in K
   (Standard configurations are
    512, 1024, ... )
?
```

In response, enter the correct memory size.

**NOTE** Some memory expansion cards add memory in increments of 256K bytes. SETUP is NOT restricted to incremental sizes and accepts any memory size.

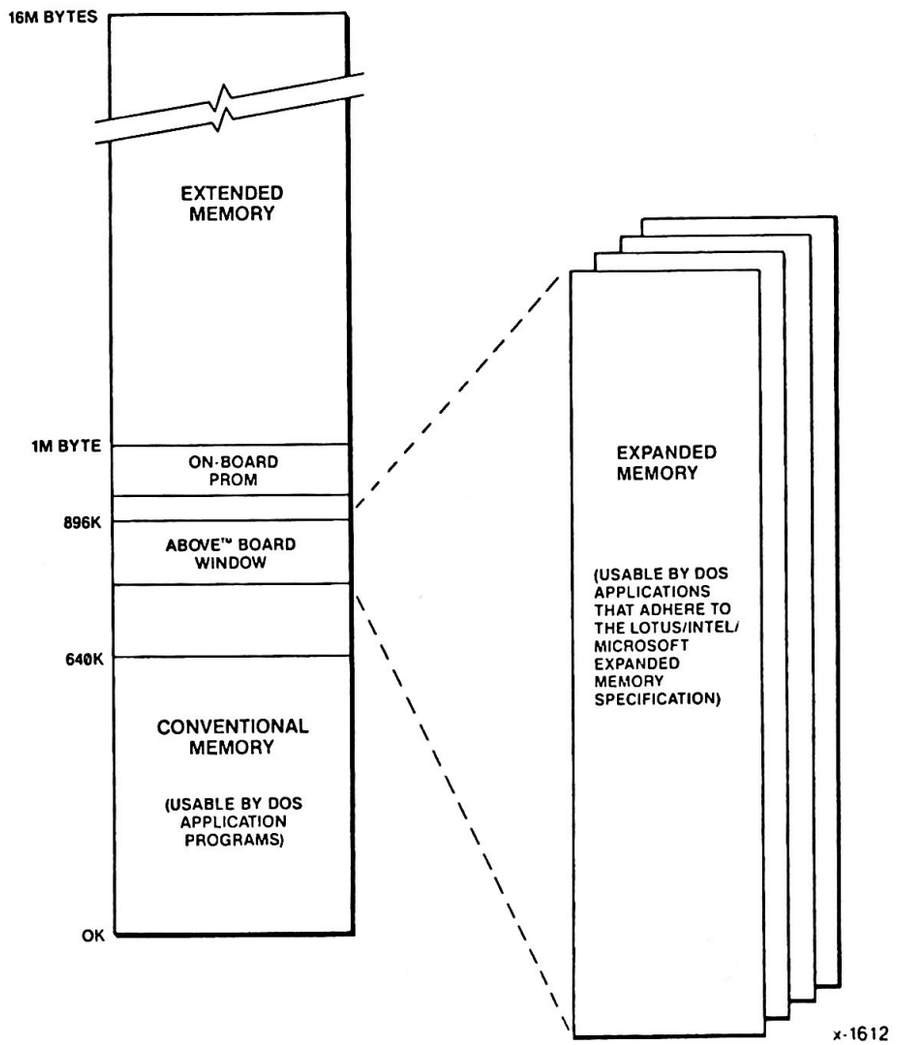


Figure 4-2. Memory Map

Primary Video Adapter

Next, SETUP displays the following information concerning video adapters:

```
The primary display is used by the
system following boot.  If more than
one video adapter is installed in your
system you must select one as primary.
If you have an EGA installed, the EGA
option must be selected even if another
adapter is to be used as primary.
See your installation manual for details
of option switch settings that might
also be needed.

Prime Video Adapter is  EGA

Is this correct  (Y or N) ?
```

If the listed video adapter is correct for your system, type **Y** and press **<Enter>**.

If your system's primary video adapter is not the type indicated in the this screen, type **N** and press **<Enter>**. This causes SETUP to display the following information:

```
Use the number code to indicate the
primary display adapter

     0     EGA
     1     Color graphic (40 columns)
     2     Color graphic (80 columns)
     3     Monochrome
```

In response, enter the number that corresponds to your primary video adapter and press **<Enter>**.

**NOTE** If your system has an EGA monitor, answer with 0 (EGA), even if another adapter is the primary one. This enables the SETUP program to configure the EGA properly.

## 4.3.3 Step 3: Rebooting the System

After you have modified the option settings as necessary, SETUP displays the settings you have entered for all options, and asks if these options are correct. If there are any errors in the option settings, type **N** and press **<Enter>**. This causes SETUP to take you through each option screen again.

If the option settings are correct, type **Y** and press **<Enter>**. SETUP then prompts you to reboot the system as follows:

```
Your system must now be rebooted.
Insert the DOS disk and Press <enter>
```

Remove the SETUP diskette, insert the DOS diskette in drive A, and press **<Enter>**. The new configuration settings take effect upon booting.

## 4.4 READYING THE FIXED DISK

If you order a fixed disk with the SYP301 (or install one yourself), you would no doubt prefer to have the SYP301 start itself by reading the operating system from the fixed disk rather than having to mount a floppy diskette in Drive A. What you must do to prepare a fixed disk for this kind of operation depends a great deal on the operating system you plan to use. However, readying the fixed disk usually involves the following operations:

- Performing a low-level format of the fixed disk to set the sector size, interleave factor, and other basic items
- Partitioning the fixed disk so the operating system knows how much of the disk to use
- Performing an operating-system-level format of each fixed disk partition, so that operating system files can be placed on the disk
- Loading the operating system and related files onto the formatted disk

If you order one of the fixed disks that Intel makes available with the SYP301, the low-level formatting will already be completed and the battery-backed memory will contain information about the drive type. To perform the remaining operations, refer to the documentation that accompanies the operating system you intend to use.

# CHAPTER 5
# CONTENTS


**CHAPTER 5**
**OPERATING THE DEVICES**
5.1 Using the Keyboard . . . . . 5-1
5.2 Using the Disk Drives . . . . . 5-4
5.3 System Unit Cover Keylock . . . . . 5-4

# CHAPTER 5
# OPERATING THE DEVICES

This chapter gives information concerning routine use of the keyboard, disk drives, and the keylock.

## 5.1 USING THE KEYBOARD

The keyboard is divided into three functional areas: the typewriter key area, the numeric keypad, and the function keys. Three keys have light-emitting diode (LED) status lights: Caps Lock, Num Lock, and Scroll Lock. See Figure 5-1.

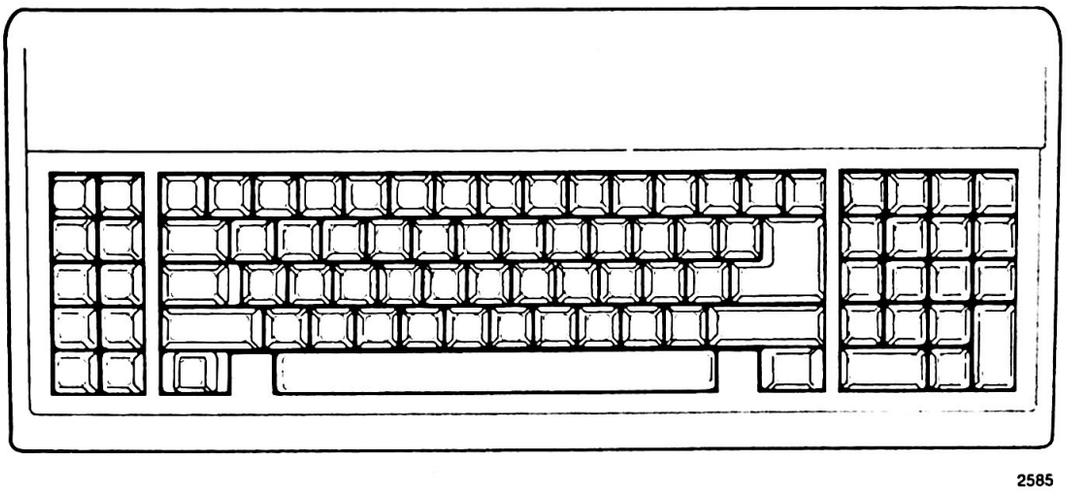


Figure 5-1. Keyboard

Some keys perform valuable functions beyond that implied by the key's name.

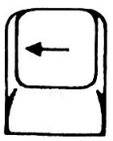

The Backspace key moves the cursor one space to the left erasing the character in that position.

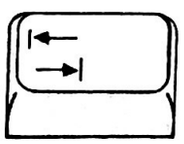


The Tab key moves the cursor right to the next tab stop. The initial tab settings are operating system dependent.

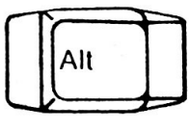


The Alternate key is used with the numeric keypad keys to enter ASCII codes for access to special characters (see Appendix F), in combination with other special function keys such as with <Ctrl> and <Del> to reset the system, and in combination with keys on the numeric keypad to toggle between 8MHz and 16MHz processor speeds and set the keyclick volume, as follows:

The function of the Delete key depends on the operating system. It usually erases the character under the cursor. All characters to the right of the cursor move left one position.

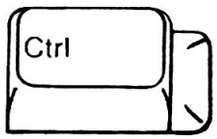


m-0786

The Control key is used in combination with other keys for a wide variety of purposes including:

**<Ctrl><Alt><Del>**

Press the Control key, Alternate key and Delete key to restart the system. This action is also called a *system reset* or *rebooting*.

**<Ctrl><NumLock>**

When using DOS, press the Control key and Numeric Lock key to stop the text on the screen from scrolling. This action is often called a pause. Press any alphabetic character to resume the scrolling.

**<Ctrl><ScrollLock>**

When using DOS, press the Control key and Scroll Lock key to stop (break) a program. This action is often called *control break.*

**<Ctrl><Alt><1>** (on the numeric keypad)
**<Ctrl><Alt><2>** (on the numeric keypad)

Press the Control key and Alternate key with the End key (the 1 key on the numeric keypad) and the <down-arrow> key (the 2 key on the numeric keypad) to toggle the CPU clock speed between 8 MHz and 16 MHz. The speaker will sound a low pitch at 8 MHz and a high pitch at 16 MHz. Generally, you will want to take advantage of the speed offered by the clock operating at 16 MHz, which is the default condition. Exceptions are discussed in Chapter 6.

**<Ctrl><Alt><+>** (on the numeric keypad)

Press the Control key and Alternate key with the Plus key on the numeric keypad to change the volume of the click that occurs each time a key is pressed. There are eight volume levels that can be changed in a circular fashion. Pressing the <Ctrl><Alt><+> key sequence increases the volume to the next level. When the volume is at the highest level, pressing the key sequence again changes to the least audible setting.

When the system starts running, the keyclick volume is automatically set to the second volume level.

The Escape key is widely used by applications to return to a previous menu or condition.

m-0787

The Numeric Lock key switches the cursor keys to number keys (the Shift key will work in reverse). The LED comes on when you press the Numeric Lock key or when the current application is in the number lock mode. The numeric keypad returns to cursor mode you press the Numeric Lock key again or when the application returns to cursor mode.

The Scroll Lock key locks the current text line to the cursor. Then the cursor-up and cursor-down keys can move the text up or down on the screen. The Scroll Lock LED comes on when the key is active.

The System Request key functions are defined by the operating system and by applications.

The Print Screen key when used with the Shift key, sends the current contents of the screen to an attached printer.

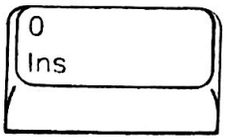


m-0788

The Insert key is used by many applications to insert data in a line.

The Function keys serve multiple purposes and are defined differently depending on the current application.

## 5.2 USING THE DISK DRIVES

Every SYP301 comes equipped with a half-height, high-density, 5 1/4-inch floppy disk drive in the top of the right-front device bay of the system unit. When using DOS, this drive is designated as **drive A.** If you order a fixed disk with the SYP301, that full-height disk is mounted in the upper portion of the device bay to the left of the high-density drive. Under DOS, this drive is designated as **drive C.**

There is space in the right bay for two additional half-height devices. When an Intel fixed disk option is ordered, there is no additional device space in the left bay. If a second floppy-disk drive is installed beneath drive A, it will be designated drive B when using DOS. If an additional fixed disk is added, the second fixed disk is designated drive D when using DOS. The disk controller board in the SYP301 is equipped with enough connectors and cables to support two floppy drives and two fixed disks.

Because drive A is a 1.2M byte floppy drive, a 360K byte floppy drive is often selected for drive B.

## 5.3 SYSTEM UNIT COVER KEYLOCK

The SYP301 includes a keylock on the front of the system unit (see Figure 5-2). The keylock serves two purposes:

- Physically locks the system unit cover so that it cannot be removed.
- Locks out the keyboard so that nothing can be entered via the keyboard keys.

The locked position is to the right (counterclockwise) and the unlocked position is to the left (clockwise).

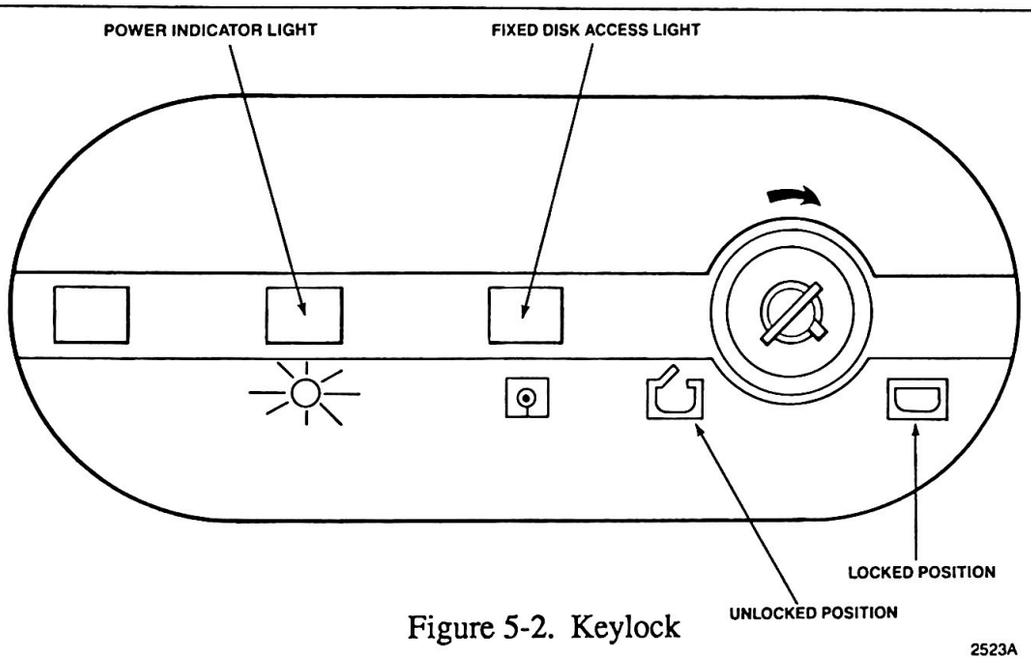


Figure 5-2. Keylock

You now should have sufficient information about using the SYP301 to begin running applications. Refer to the Appendixes for additional information you may need about the system components.

Continue reading Chapter 6 for information on when and how to change the system clock speeds.

# CHAPTER 6
# CONTENTS

CHAPTER 6
SETTING THE PROCESSOR CLOCK SPEED
6.1 Setting the Clock Speed at the Keyboard . . . . . .6-1
6.1 Setting the Clock Speed with Software . . . . . .6-2

# CHAPTER 6
# SETTING THE PROCESSOR CLOCK SPEED

The 80386 runs at a clock speed of 16MHz in the SYP301, resulting in system clock cycles of 62.5ns. This gives the system board over twice the performance of an 8MHz IBM AT. However, for those applications that require slower operation (such as installing some copy-protected software), the system offers a "deturbo" mode that enables the board to simulate the performance of a 8MHz IBM AT. The deturbo mode can be enabled and disabled in two ways: from the keyboard and with software.

## 6.1 SETTING THE CLOCK SPEED AT THE KEYBOARD

The following keystroke sequences can be used to set the processor clock speed.

| Key Sequence | Description |
|---|---|
| **Ctrl-Alt-1** (on keypad) | Hold down the **Ctrl** and **Alt** keys and pressing **1** on the numeric keypad to place the board in deturbo mode (emulating the performance of an 8MHz AT). |
| **Ctrl-Alt-2** (on keypad) | Hold down the **Ctrl** and **Alt** keys and pressing **2** on the numeric keypad to place the board in turbo mode (resuming full processor speed). |

The deturbo mode does not affect the clock rate at which the 80386 executes instructions, nor does it affect the clock rate of the math coprocessor. Rather, it inserts processor hold states between each instruction, causing an effective processor speed of 8MHz.

If you place the system in deturbo mode, the version of the BIOS on your system board determines whether that setting remains after you reboot the system. The version number is displayed whenever you start or reboot your computer, as follows:

```
Phoenix 80386 ROM BIOS Version x.yy
```

- If the version number is 3.06 or larger, the deturbo setting remains in effect after warm reboots (pressing **Ctrl-Alt-Del**). Cold reboots (turning the system off and then on) cause the system board to run at full processor speed regardless of any previous deturbo setting.
- If the version number is smaller than 3.06, the deturbo logic is reset after every reboot (even soft reboots) causing the system board to run a full processor speed.

The deturbo mode does not affect the clock rate at which the 80386 executes instructions, nor does it affect the clock rate of the math coprocessor. Rather, deturbo mode inserts processor hold states between each instruction, causing an effective processor speed of 8 MHz.

An audible tone occurs when you change the processor mode. Pressing Ctrl-Alt-1 (for deturbo mode) emits a low-pitched tone. Pressing Ctrl-Alt-2 (for full speed) emits a high-pitched tone.

## 6.1 SETTING THE CLOCK SPEED WITH SOFTWARE

CPU speed can also be set with software. Figure 6-1 lists the assembly language code needed to place the board in deturbo mode. Figure 6-2 shows the code to return the board to 16MHz operation.

```
;
; slow -- put iSBC 386AT into DETURBO mode (simulated 8MHz)
;
code    segment public
assume cs:code,ds:code
        org     100h
start:  jmp     begin
msg     db      'iSBC 386AT in DETURBO mode','$'
begin:  mov     ax,cs           ;set up ds
        mov     ds,ax
        mov     ax,0eaH
        out     64H,ax
        mov     dx,offset msg   ;address of deturbo message
        mov     ah,09h          ;display string function request
        int     21h             ;call DOS
done:   mov     ah,4ch          ;terminate process funct request
        int     21h             ;call DOS
code    ends
end     start                   ;start is the entry point
```

Figure 6-1. Setting Deturbo Mode with Software

```
;
; fast -- put iSBC 386AT into TURBO mode (16MHz)
;
code    segment public
assume cs:code,ds:code
        org     100h
start:  jmp     begin
msg     db      'iSBC 386AT in TURBO mode','$'
begin:  mov     ax,cs           ;set up ds
        mov     ds,ax
        mov     ax,0e5H
        out     64H,ax
        mov     dx,offset msg   ;address of turbo message
        mov     ah,09h          ;display string function request
        int     21h             ;call DOS
done:   mov     ah,4ch          ;terminate process funct request
        int     21h             ;call DOS
code    ends
end     start                   ;start is the entry point
```

Figure 6-2. Setting Turbo Mode with Software

# APPENDIX A
# RECORDING SERIAL NUMBERS

Having a record of the serial numbers of your SYP301 workstation and its components can be valuable should your equipment be misplaced or stolen. The following figures show the location of the serial numbers of the SYP301 components. Record these numbers in the space provided.

Figure A-1 shows the location of the system unit serial number. Record the number in the space below.

SYSTEM UNIT SERIAL NUMBER _____

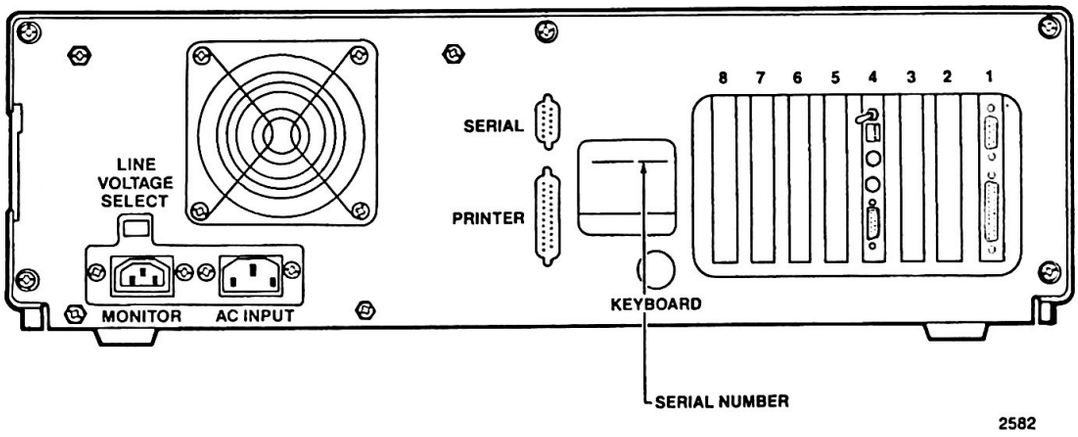


Figure A-1. Location of System Unit Serial Number

Figure A-2 shows the location of the key serial number. Record the number in the space below.

KEY SERIAL NUMBER _____

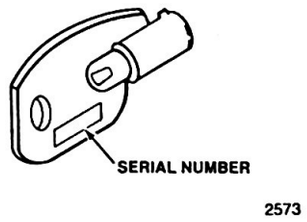


Figure A-2. Serial Number on Key

Figure A-3 shows the location of the disk controller card serial number. Record the number in the space below.

DISK CONTROLLER CARD SERIAL NUMBER _____

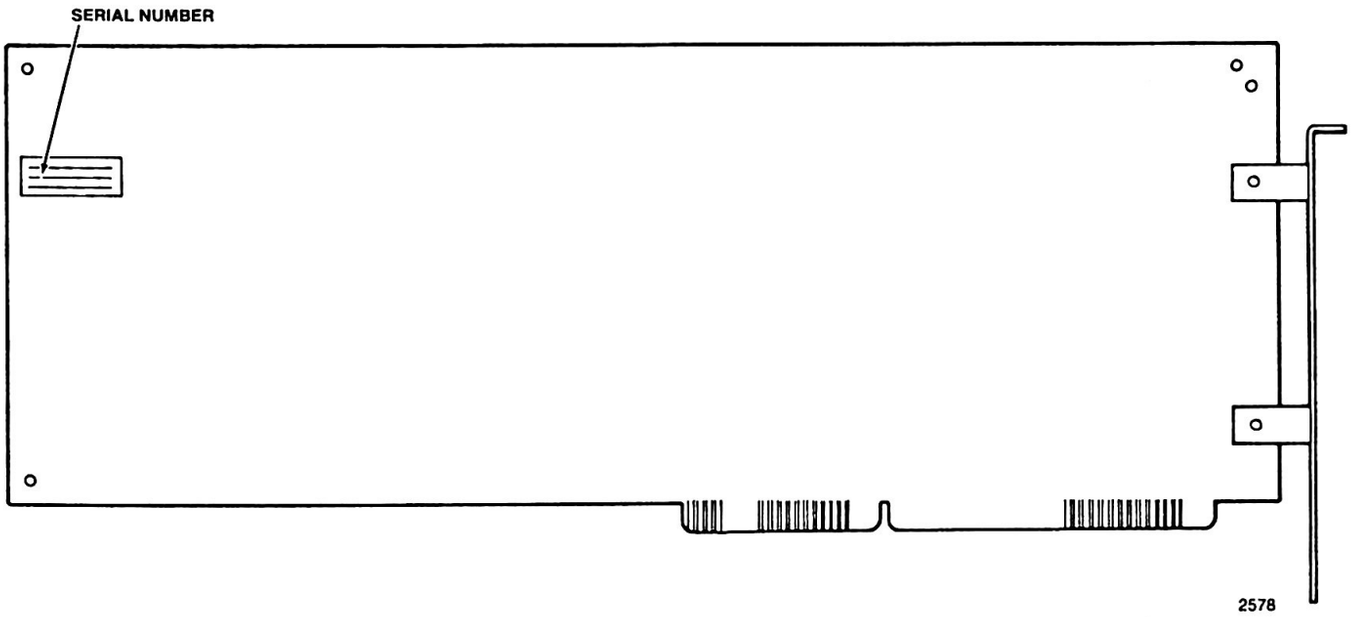


Figure A-3. Location of the Disk Controller Card Serial Number

Figure A-4 shows the location of the 32-bit memory expansion board serial number. Record the number in the space below.

32-BIT MEMORY EXPANSION BOARD SERIAL NUMBER _____

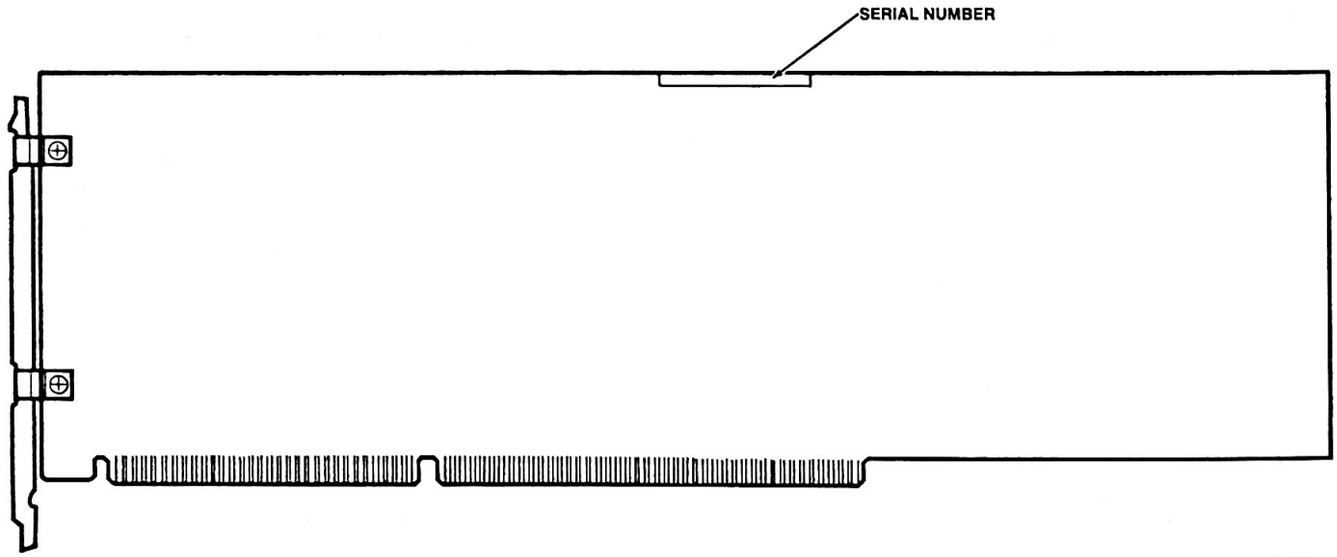


Figure A-4. Location of the 32-bit Memory Expansion Board Serial Number

A video adapter and monitor are not supplied with the SYP301, but they must be purchased before the system can be used. For convenience, record their serial numbers below.

VIDEO ADAPTER SERIAL NUMBER _____

VIDEO MONITOR SERIAL NUMBER _____

# APPENDIX B
# ERROR MESSAGES

## B.1 POWER-ON SELF TEST (POST) ERROR MESSAGES

If the Power-On Self Test (POST) can display an error message to the monitor screen, it will beep the speaker twice as the message appears. However, when an error occurs before the monitor is initialized, the error messages cannot be displayed on the screen. Therefore, the POST will send out a series of beeps instead. If a non-fatal system board error or an off-board error occurs, the POST will display an error message and prompt you to press the **F1** function key to continue. If a fatal error occurs, the POST will send a beep code and halt the system. If a video adapter failure occurs, the POST will send a long beep followed by one or more short beeps.

### B.1.1 Screen Messages

The POST can display messages during a normal test, and it can display them when it encounters a non-fatal system-board failure or an off-board failure. The following messages can be displayed. The items in *italic* are variable items that will differ from message to message. If you receive a failure message, follow the "User Action" instructions for that message and retry the operation.

**Message:** *xxxx*k Base Memory, *xxxx*k Expansion
**User Action:** Description of memory configuration. No action required.

**Message:** Decreasing available memory
**User Action:** This message immediately follows any memory error message, informing you that memory chips are failing.

**Message:** Diskette drive 0 seek to track 0 failed
**User Action:** Drive A has either failed or is missing. Check drive A.

**Message:** Diskette drive reset failed
**User Action:** The diskette adapter has failed. Check the cable connections and reseat the controller board.

**Message:** Diskette read failure - strike F1 to retry boot
**User Action:** Replace the diskette and try again.

**Message:** Display adapter failed; using alternate
**User Action:** Check to ensure that the monitor type jumpers are set correctly.

**Message:** Gate A20 failure
**User Action:** The system cannot switch into protected mode. Check the system board.

**Message:** Hard disk controller failure
**User Action:** Replace the hard disk controller.

**Message:** Hard disk failure
**User Action:** Check the system configuration and drive type, and rerun the SETUP program.

**Message:** Hard disk read failure - strike F1 to retry boot
**User Action:** Check the system configuration and drive type, and rerun the SETUP program.

**Message:** Invalid configuration information - please run SETUP program
**User Action:** Check the system configuration and drive type, and rerun the SETUP program.

**Message:** Keyboard clock line failure
**User Action:** Check the keyboard connection.

**Message:** Keyboard controller failure
**User Action:** Check the keyboard controller.

**Message:** Keyboard data line failure
**User Action:** Check the keyboard connection.

**Message:** Keyboard is locked - please unlock
**User Action:** Unlock the keyboard and try again.

**Message:** Keyboard stuck key failure
**User Action:** One of the keys is pressed. Release it and try again.

**Message:** Memory address line failure at *xxxx*, read *xxxx* expecting *xxxx*

**User Action:** The memory chip circuitry has failed. Check the circuitry.

**Message:** Memory data line failure at *xxxx*, read *xxxx* expecting *xxxx*

**User Action:** One of the memory chips or associated circuitry has failed. Try replacing the memory chips.

**Message:** Memory high address line failure at *xxxx*

**User Action:** The memory chip circuitry has failed. Check the circuitry.

**Message:** Memory odd/even logic failure at *xxxx*, read *xxxx* expecting *xxxx*

**User Action:** The memory chip circuitry has failed. Check the circuitry.

**Message:** Memory parity failure at *xxxx*

**User Action:** One of the parity memory chips has failed. Try replacing the memory chips.

**Message:** Memory test terminated by keystroke

**User Action:** A key was pressed during the memory test. Reboot the system to rerun the POST.

**Message:** Memory write/read failure at *xxxx*, read *xxxx* expecting *xxxx*

**User Action:** One of the memory chips has failed. Try replacing the memory chips.

**Message:** No boot device available - strike F1 to retry boot

**User Action:** Make sure that the diskette drive A contains a DOS system diskette and that the door to the diskette drive is closed.

**Message:** No boot sector on hard disk - strike F1 to retry boot

**User Action:** The hard disk is not formatted. Format the disk.

**Message:** No timer tick

**User Action:** Check the timer chip on the system board.

**Message:** Not a boot diskette - strike F1 to retry boot

**User Action:** Replace the diskette with a DOS system diskette and try again.

**Message:** *xxxx* Optional ROM bad Checksum = *xxxx*

**User Action:** A peripheral card contains a defective ROM. Replace the peripheral card.

**Message:** Phoenix 80386 ROM BIOS Version 3.*xx*
Copyright 1986 Phoenix Technologies Ltd
All Rights Reserved

**User Action:** Informational. No action required.

**Message:** Shutdown failure

**User Action:** The keyboard controller or its associated logic has failed. Check the keyboard controller.

**Message:** Strike the F1 key to continue

**User Action:** Follow the instructions to continue.

**Message:** Time of day clock stopped

**User Action:** The battery is probably dead. Replace the battery and run SETUP.

**Message:** Timer chip counter 2 failed

**User Action:** Check the timer chip on the system board.

**Message:** Timer or Interrupt Controller Bad

**User Action:** Check the timer chip or the interrupt controller on the system board.

**Message:** Unexpected interrupt in protected mode

**User Action:** The nonmaskable interrupt (NMI) port can't be disabled. Check the system board, particularly the logic associated with the nonmaskable interrupt.

## B.1.2 System Board Errors

If a POST error occurs and the monitor is not available to display the message, the POST issues a series of beeps to indicate the error.

For example, a failure of bit 3 in the first 64K of RAM is indicated by a 2-1-4 beep code (a burst of two beeps, a single beep, and a burst of four beeps). In addition, the POST writes a value to I/O port 80H to enable debugging tools to identify the area of failure.

Tables B-1 and B-2 list the beep codes and I/O port values that the POST generates when it encounters error conditions. Table B-1 lists fatal errors (those that halt the system). Table B-2 lists the non-fatal errors (those that aren't serious enough to halt the system). No beep code is sounded if a test is aborted while in progress.

Table B-1. Fatal System Board Error Beep Codes

| Beep Code | Description of Error | Contents of I/O Port 80H |
|---|---|---|
| none | 80386 register test in progress | 01H |
| 1-1-3 | Real-time clock write/read failure | 02H |
| 1-1-4 | ROM BIOS checksum failure | 03H |
| 1-2-1 | Programmable Interval Timer failure | 04H |
| 1-2-2 | DMA initialization failure | 05H |
| 1-2-3 | DMA page register write/read failure | 06H |
| 1-3-1 | RAM refresh verification failure | 08H |
| none | 1st 64K RAM test in progress | 09H |
| 1-3-3 | 1st 64K RAM chip or data line failure multi-bit | 0AH |
| 1-3-4 | 1st 64K RAM odd/even logic failure | 0BH |
| 1-4-1 | Address line failure 1st 64K RAM | 0CH |
| 1-4-2 | Parity failure 1st 64K RAM | 0DH |
| 2-1-1 | Bit 0 1st 64K RAM failure | 10H |
| 2-1-2 | Bit 1 1st 64K RAM failure | 11H |
| 2-1-3 | Bit 2 1st 64K RAM failure | 12H |
| 2-1-4 | Bit 3 1st 64K RAM failure | 13H |
| 2-2-1 | Bit 4 1st 64K RAM failure | 14H |
| 2-2-2 | Bit 5 1st 64K RAM failure | 15H |
| 2-2-3 | Bit 6 1st 64K RAM failure | 16H |
| 2-2-4 | Bit 7 1st 64K RAM failure | 17H |
| 2-3-1 | Bit 8 1st 64K RAM failure | 18H |
| 2-3-2 | Bit 9 1st 64K RAM failure | 19H |
| 2-3-3 | Bit A 1st 64K RAM failure | 1AH |
| 2-3-4 | Bit B 1st 64K RAM failure | 1BH |
| 2-4-1 | Bit C 1st 64K RAM failure | 1CH |
| 2-4-2 | Bit D 1st 64K RAM failure | 1DH |
| 2-4-3 | Bit E 1st 64K RAM failure | 1EH |
| 2-4-4 | Bit F 1st 64K RAM failure | 1FH |
| 3-1-1 | Slave DMA register failure | 20H |
| 3-1-2 | Master DMA register failure | 21H |
| 3-1-3 | Master interrupt mask register failure | 22H |
| 3-1-4 | Slave interrupt mask register failure | 23H |
| none | Interrupt vector loading in progress | 25H |
| 3-2-4 | Keyboard controller test failure | 27H |
| none | Real-time clock power failure and checksum calculation in progress | 28H |

Table B-2. Non-Fatal System-Board Error Beep Codes

| Beep Code | Description of Error | Contents of I/O Port 80H |
|---|---|---|
| none | Real-time clock configuration validation in progress | 29H |
| 3-3-4 | Screen memory test failure | 2BH |
| 3-4-1 | Screen initialization failure | 2CH |
| 3-4-2 | Screen retrace test failure | 2DH |
| none | Search for video ROM in progress | 2EH |
| none | Screen believed operable | 30H |
| none | Screen believed running with video ROM | 30H |
| none | Monochrome display believed operable | 31H |
| none | Color display (40 column) believed operable | 32H |
| none | Color display (80 column) believed operable | 33H |

## B.2 SETUP ERROR MESSAGES

The SETUP program can report the following error messages. These messages can also appear when you boot the system.

**Message:** ERRORS FOUND
DISK X: FAILED INITIALIZATION

**Explanation:** SETUP reports that the fixed-disk configuration information is incorrect.

**Action:** Rerun SETUP and enter correct fixed-disk information.

**Message:** ERRORS FOUND
INCORRECT CONFIGURATION INFORMATION
MEMORY SIZE MISCOMPARE

**Explanation:** SETUP reports that the size of base or expansion (extended) memory does not agree with configuration information.

**Action:** Rerun SETUP and enter correct memory size.

**Message:** Hard disk failure
strike the F1 key to continue

**Explanation:** The system boot reports fixed-disk error. This error probably occurs because the characteristics of the fixed disk do not match the disk type selected.

**Action:** Press the F1 function key, rerun SETUP, and enter the correct fixed-disk information. If this doesn't work, you will probably need to run the DOS command FDISK to assign DOS partitions or perform a low-level format of the fixed disk.

**NOTE** SETUP does not issue an error message if the drive type you specify does not match the drive itself. Therefore, make sure to enter the correct number and type of disk drives when you use SETUP.

**Message:** Invalid configuration information - please
run SETUP program

**Explanation:** The system boot reports that configuration information does not agree with actual system options.

**Action:** Recheck all system options and rerun SETUP. Make sure to check the amount of conventional and extended memory, the number and types of disk drives, and the type of the display adapter. The options chosen with SETUP should match the jumpers set on the system board. See Chapter 2 for the jumper settings.

**Message:** Time-of-day not set - please run SETUP program

**Explanation:** The ROM BIOS start-up program reports that the date and time information is not set in the real-time clock.

**Action:** Run SETUP and configure the system.

# APPENDIX C
# MOVING THE SYP301

Improper preparation of the system before moving can cause damage to data on the fixed disk or a floppy diskette, or damage to parts of the system itself. The basic steps to perform before moving include backing up the files from the fixed disk, protecting the floppy drive head, and repacking the components.

It is not required but is strongly recommended, that before you begin the moving procedure given below that you backup the fixed disk to ensure against loss of data. See the *Microsoft MS-DOS User's Guide* for a description of the BACKUP command.

1. Switch off the power to all devices and then to the system unit.

2. Disconnect all power cords and cables. Coiling the cords and cables, and fastening them with tape is recommended.

3. Replace the cardboard insert that originally came in the floppy drive. If you do not have the cardboard insert, a blank disk will give the same protection. Do the same for additional floppy drives on your system.

4. If the move requires vehicular transportation, it is recommended that the system components be placed in their original shipping boxes.

When the system reaches its new location, unpack the components, and follow the appropriate installation and setup instructions in this manual.

# APPENDIX D
# KEYBOARD TEMPLATES AND SPECIAL CHARACTER SETS

## D.1 ACCESSING KEYBOARD TEMPLATES

The DOS operating system interprets the keyboard keys in seven styles. Templates are included in this appendix for each of these keyboard styles. The templates are designed to be reproduced, the two halves taped together, and then set above the keys of the keyboard. See Figure D-1.

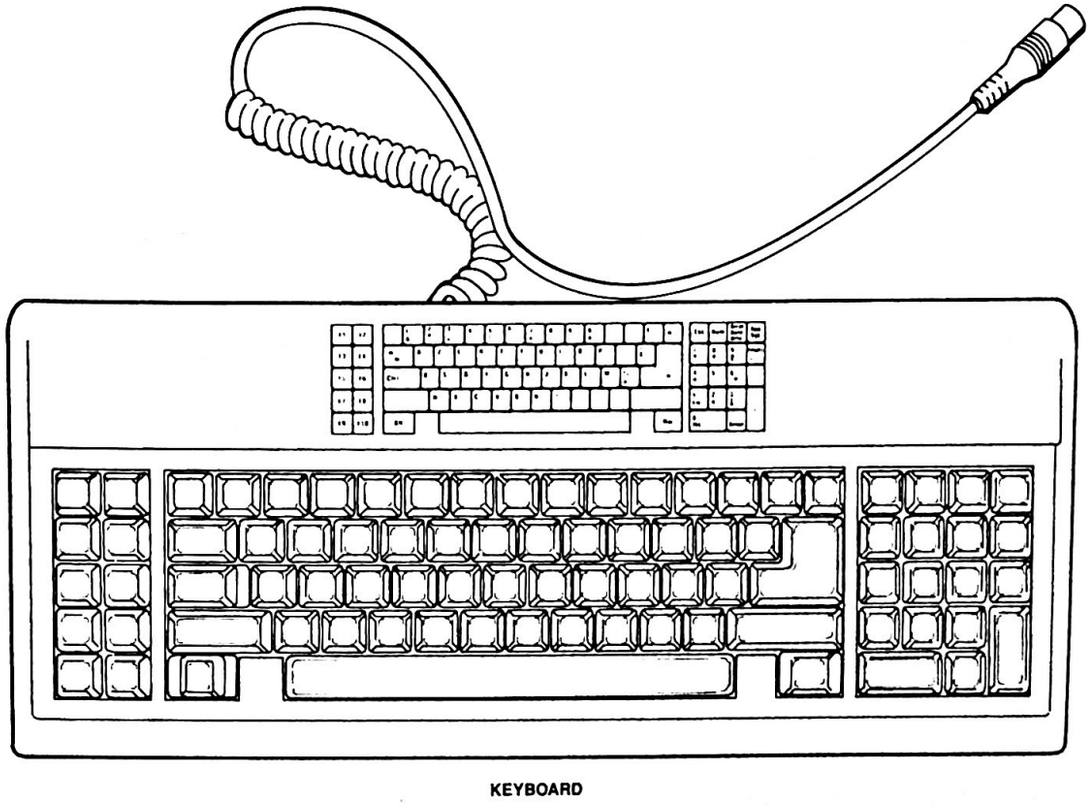


Figure D-1. Placement of a Keyboard Template

DOS interprets the keyboard keys in U.S. English unless you specify another keyboard program by using the DOS KEYBxx command. This command loads a specified keyboard program. The command is used by typing:

`KEYBxx` (and press **<Enter>**)

where xx is one of the following two-character codes for keyboard programs:

| Keyboard Program | Code |
|---|---|
| Dvorak | DV |
| French | FR |
| German | GR |
| Italian | IT |
| Spanish | SP |
| U. K. English | UK |
| U. S. English | US |

The SYP301 automatically loads the U.S. English keyboard program upon booting. After you load another keyboard program, you can switch back to U.S. English by pressing **<Ctrl><Alt><F1>**. Press **<Ctrl><Alt><F2>** to return to the keyboard program last loaded into memory.

See the *Microsoft MS-DOS User's Guide* for more instructions in the use of the KEYBxx command.

## D.2 ACCESSING SPECIAL CHARACTERS

Special characters in each keyboard program are accessible by the following procedure:

1. Press and hold the **<Alt>** key.
2. Type the three-digit code for the desired special character.
3. Release the **<Alt>** key.

See the figure following the template of each keyboard program for a list of these special characters and their codes.

## D.3 DVORAK

Figure D-2 is the Dvorak template and Figure D-3 shows the special characters available with the Dvorak keyboard program.

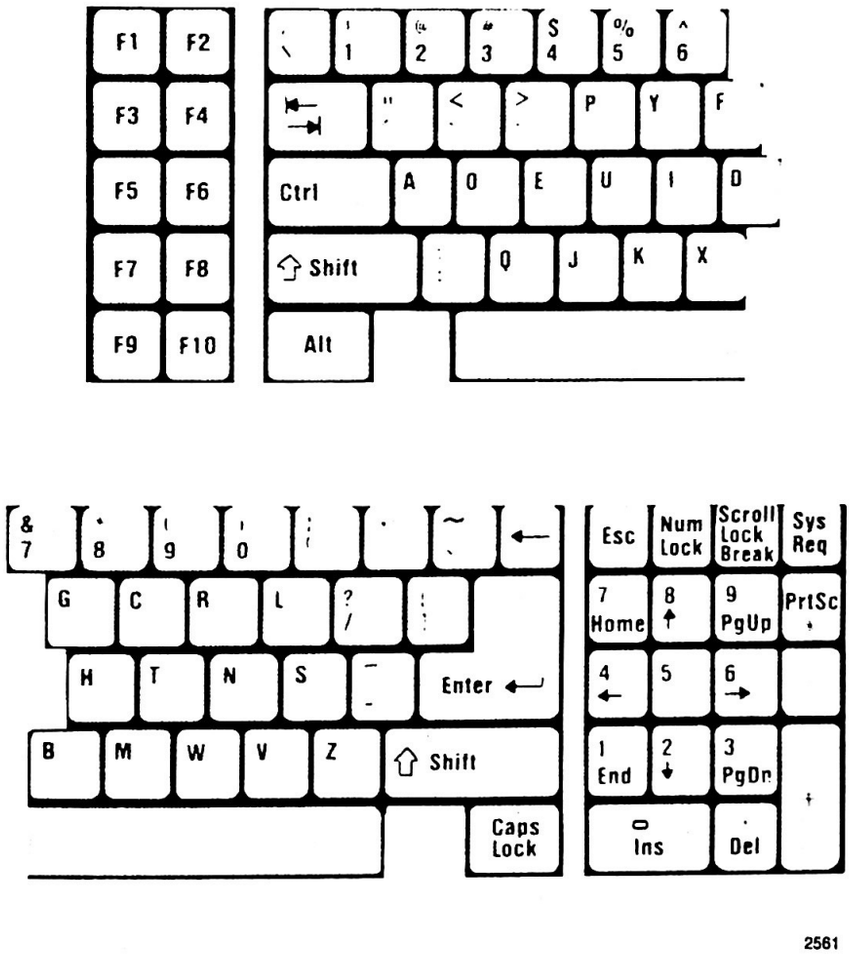


Figure D-2. Dvorak Keyboard Template

| | | | | | | | | | | | | | | | | | | | |
|---|---|---|---|---|---|---|---|---|---|---|---|---|---|---|---|---|---|---|---|
| 127 | ⌂ | 136 | ė | 145 | œ | 154 | U | 163 | u | 172 | ¼ | 229 | σ | 239 | ∩ | 248 | ° |
| 128 | Ç | 137 | e | 146 | Æ | 155 | c | 164 | ń | 173 | ı | 230 | µ | 240 | ≡ | 249 | • |
| 129 | u | 138 | è | 147 | ȯ | 156 | £ | 165 | Ń | 174 | « | 231 | τ | 241 | ± | 250 | · |
| 130 | e | 139 | ı | 148 | o | 157 | ¥ | 166 | a̲ | 175 | » | 232 | Φ | 242 | ≥ | 251 | √ |
| 131 | à | 140 | i | 149 | ȯ | 158 | Pts | 167 | o̲ | 224 | ∝ | 234 | Ω | 243 | ≤ | 252 | ⁿ |
| 132 | a | 141 | ì | 150 | u | 159 | ƒ | 168 | ¿ | 225 | ß | 235 | δ | 244 | ⌠ | 253 | ² |
| 133 | à | 142 | A | 151 | u | 160 | a | 169 | ⌐ | 226 | Γ | 236 | ∞ | 245 | J | 254 | ■ |
| 134 | a | 143 | À | 152 | y | 161 | i | 170 | ¬ | 227 | π | 237 | ∅ | 246 | ÷ | 255 | |
| 135 | ç | 144 | É | 153 | O | 162 | o | 171 | ½ | 228 | Σ | 238 | ∈ | 247 | ≈ | | |

m-0784

Figure D-3. Dvorak Special Characters

## D.4 FRENCH

Figure D-4 is the French template, and Figure D-5 shows the special characters available with the French keyboard program.

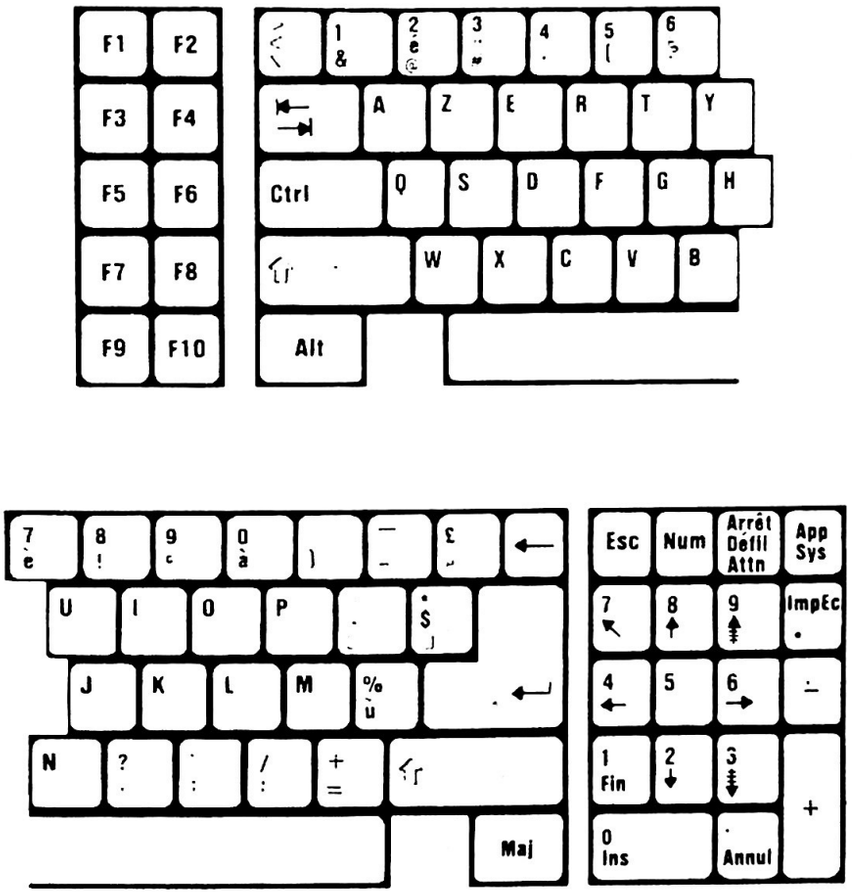


Figure D-4. French Keyboard Template

| | | | | | | | | | | | | | | | |
|---|---|---|---|---|---|---|---|---|---|---|---|---|---|---|---|
| 96 | ` | 143 | Λ | 160 | a | 169 | ⌐ | 226 | ⌈ | 235 | δ | 244 | ⌈ | 254 | ■ |
| 123 | ¦ | 144 | E | 161 | ί | 170 | ¬ | 227 | π | 236 | ∞ | 245 | J | | |
| 124 | | 145 | œ | 162 | o | 171 | ½ | 228 | Σ | 237 | ∅ | 246 | ÷ | | |
| 125 | ¦ | 146 | Æ | 163 | u | 172 | ¼ | 229 | σ | 238 | ∈ | 247 | ≈ | | |
| 126 | ~ | 149 | o | 164 | ń | 173 | i | 230 | μ | 239 | ∩ | 249 | • | | |
| 127 | . | 155 | c | 165 | Ń | 174 | « | 231 | τ | 240 | ≡ | 250 | · | | |
| 128 | Ç | 157 | ¥ | 166 | a | 175 | » | 232 | Φ | 241 | ÷ | 251 | √ | | |
| 134 | a | 158 | Pts | 167 | o | 224 | ∝ | 233 | Θ | 242 | ≥ | 252 | n | | |
| 141 | ì | 159 | ƒ | 168 | ć | 225 | β | 234 | Ω | 243 | ≤ | 253 | ² | | m-0783 |

Figure D-5. French Special Characters

## D.5 GERMAN

Figure D-6 is the German template, and Figure D-7 shows the special characters available with the German keyboard program.

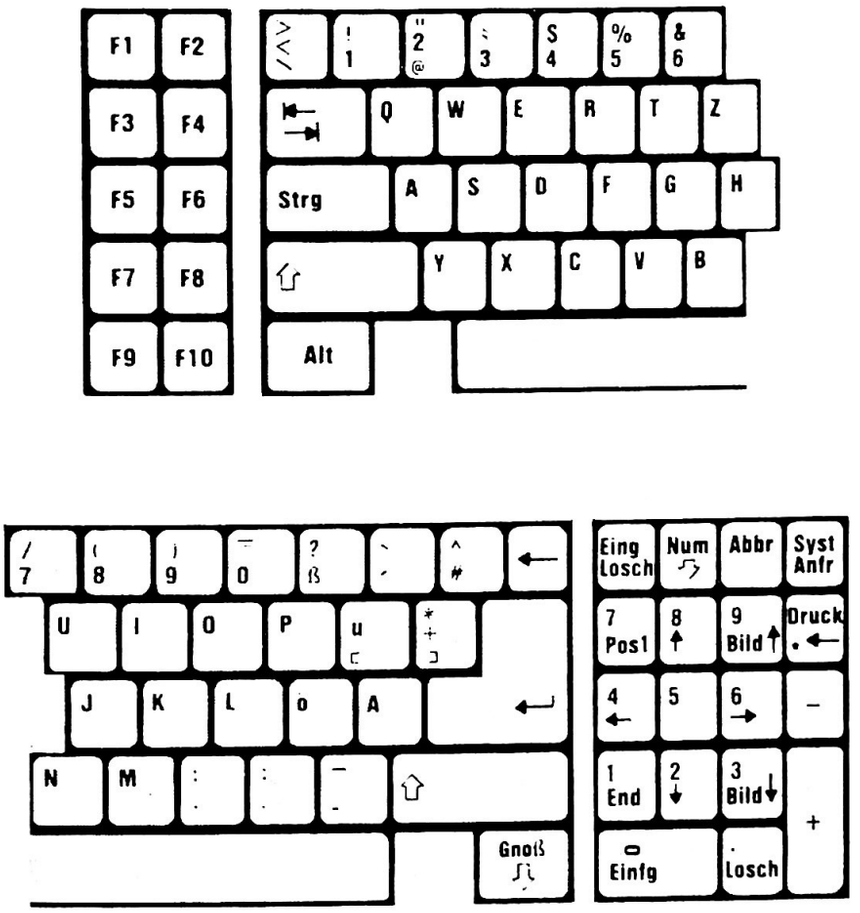


Figure D-6. German Keyboard Template

| | | | | | | | |
|---|---|---|---|---|---|---|---|
| 123 { | 136 è | 152 ÿ | 167 º | 224 ⌐ | 234 Ω | 243 ≤ | 252 ⁿ |
| 124 \| | 139 ï | 155 ¢ | 168 ¿ | 226 ⌈ | 235 δ | 244 ⌠ | 253 ² |
| 125 } | 140 î | 156 £ | 169 ⌐ | 227 π | 236 ∞ | 245 ⌡ | 254 ■ |
| 126 ~ | 141 ì | 157 ¥ | 170 ¬ | 228 Σ | 237 ∅ | 246 ÷ | |
| 127 ⌂ | 143 Å | 158 Pts | 171 ½ | 229 σ | 238 ∈ | 247 ≈ | |
| 128 Ç | 145 œ | 159 ƒ | 172 ¼ | 230 µ | 239 ∩ | 248 ° | |
| 131 â | 146 Æ | 164 ñ | 173 ¡ | 231 τ | 240 ≡ | 249 • | |
| 134 ä | 147 ô | 165 Ñ | 174 « | 232 Φ | 241 ± | 250 · | |
| 135 ç | 150 ù | 166 ª | 175 » | 233 Θ | 242 ≥ | 251 √ | |

m-0782

Figure D-7. German Special Characters

## D.6 ITALIAN

Figure D-8 is the Italian template, and Figure D-9 shows the special characters available with the Italian keyboard program.

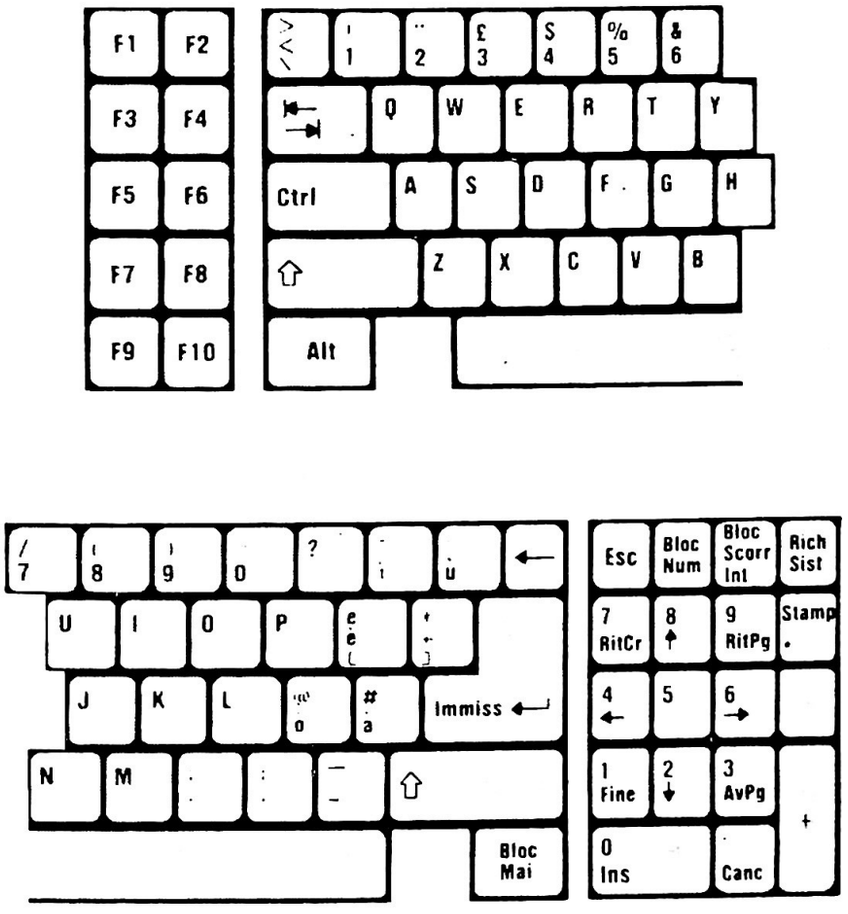


Figure D-8. Italian Keyboard Template

| | | | | | | | | |
|---|---|---|---|---|---|---|---|---|
| 96 ` | 137 e | 148 o | 160 a | 169 ⌐ | 226 Γ | 235 δ | 244 ⌠ | 253 ² |
| 127 ⌂ | 139 ı | 150 ù | 161 í | 170 ¬ | 227 π | 236 ∞ | 245 J | 254 ■ |
| 128 Ç | 140 î | 152 y | 162 o | 171 ½ | 228 Σ | 237 ∅ | 246 ÷ | 255 |
| 129 u | 142 A | 153 O | 163 u | 172 ¼ | 229 σ | 238 ∈ | 247 ≈ | |
| 131 á | 143 À | 154 U | 164 ñ | 173 ı | 230 µ | 239 ∩ | 248 o | |
| 132 a | 144 É | 155 c | 165 Ñ | 174 « | 231 τ | 240 ≡ | 249 • | |
| 134 a | 145 æ | 157 ¥ | 166 ª | 175 » | 232 Φ | 241 ± | 250 · | |
| 135 ç | 146 Æ | 158 Pts | 167 º | 224 α | 233 Θ | 242 ≥ | 251 √ | |
| 136 è | 147 ò | 159 ƒ | 168 ¿ | 225 ß | 234 Ω | 243 ≤ | 252 ⁿ | |

m-0781

Figure D-9. Italian Special Characters

## D.7 SPANISH

Figure D-10 is the Spanish template, and Figure D-11 shows the special characters available with the Spanish keyboard program.

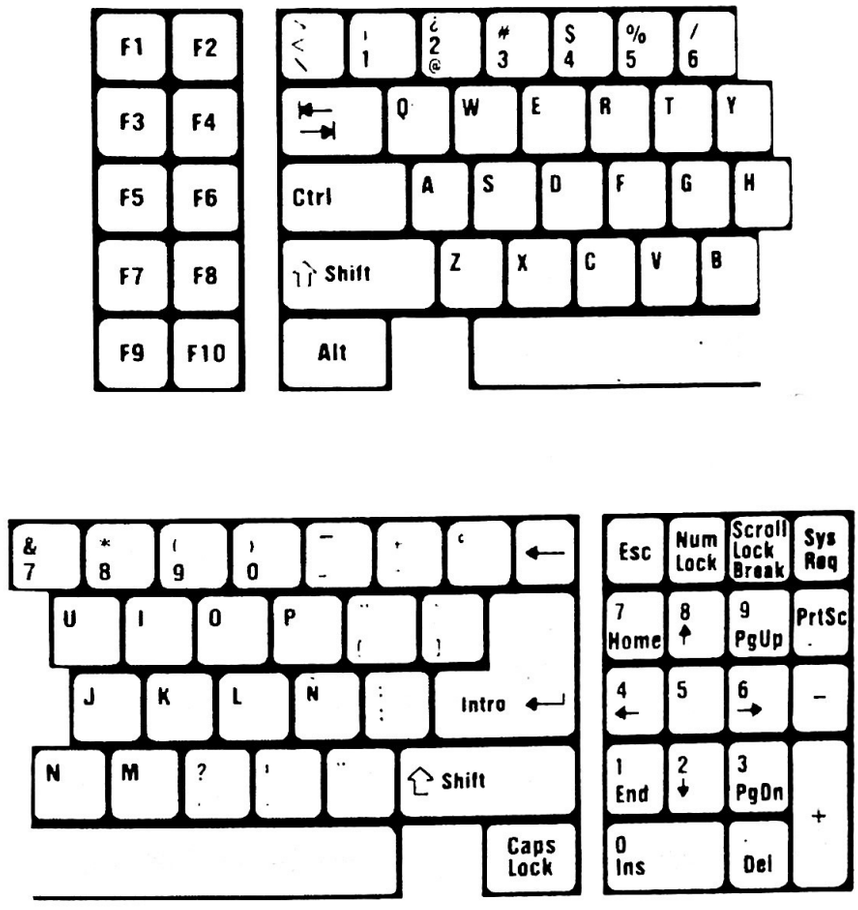


Figure D-10. Spanish Keyboard Template

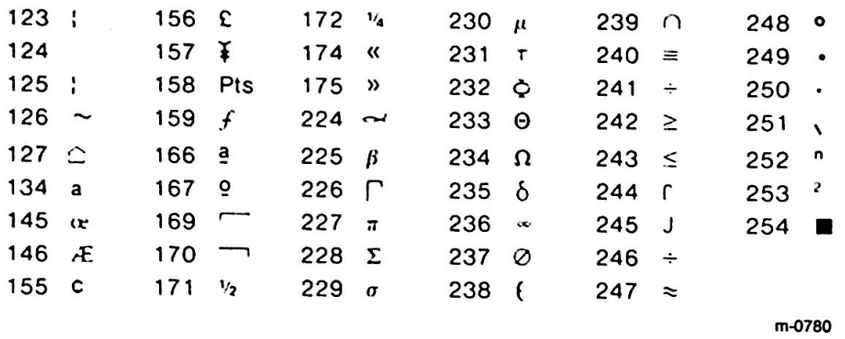


Figure D-11. Spanish Special Characters

## D.8 U.K. ENGLISH

Figure D-12 is the U.K. English template, and Figure D-13 shows the special characters available with the U.K. English keyboard program.

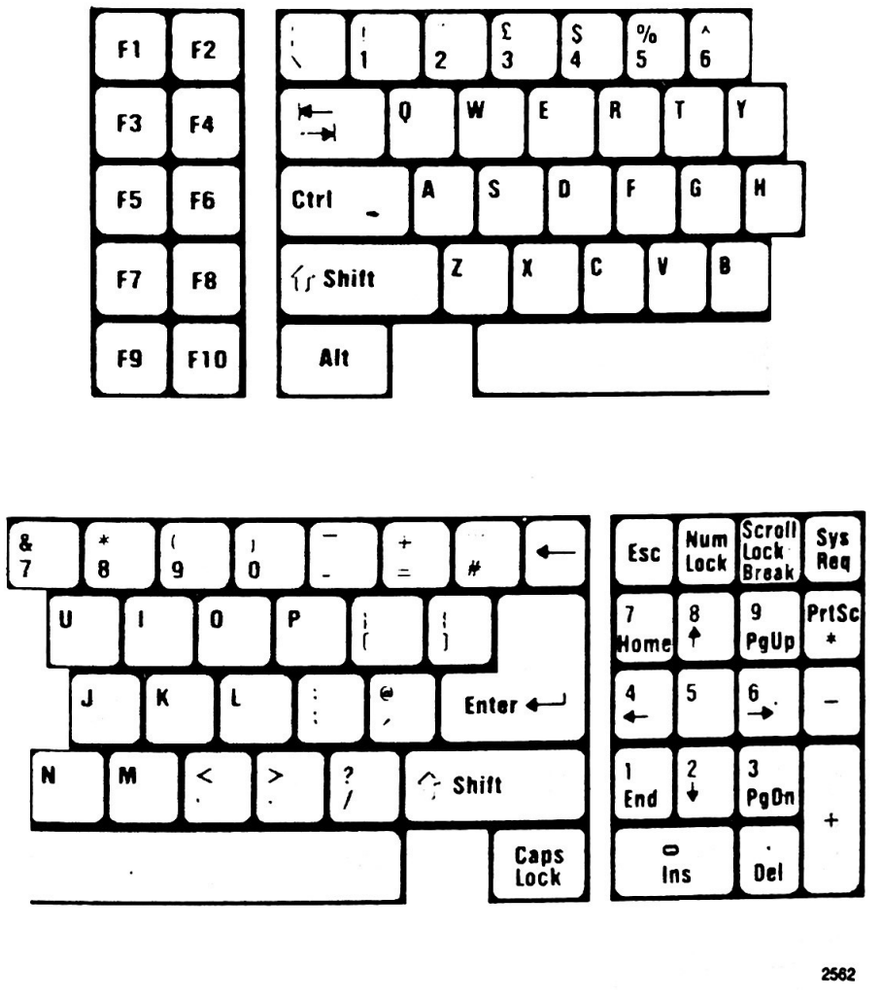


Figure D-12. U.K. English Keyboard Template

| | | | | | | | | | |
|---|---|---|---|---|---|---|---|---|---|
| 96 | 135 ç | 144 É | 153 Ö | 163 u | 172 ¼ | 229 σ | 238 ∈ | 247 ≈ |
| 127 ⌂ | 136 ê | 145 æ | 154 Ü | 164 ñ | 173 ¡ | 230 µ | 239 ∩ | 248 ° |
| 128 Ç | 137 ë | 146 Æ | 155 ¢ | 165 Ñ | 174 « | 231 τ | 240 ≡ | 249 • |
| 129 ü | 138 è | 147 ô | 157 ¥ | 166 ª | 175 » | 232 Φ | 241 ± | 250 · |
| 130 é | 139 ï | 148 ö | 158 Pts | 167 º | 224 α | 233 Θ | 242 ≥ | 251 √ |
| 131 â | 140 î | 149 ò | 159 ƒ | 168 ¿ | 225 ß | 234 Ω | 243 ≤ | 252 ⁿ |
| 132 ä | 141 ì | 150 û | 160 á | 169 ⌐ | 226 Γ | 235 δ | 244 ⌠ | 253 ² |
| 133 à | 142 Ä | 151 ù | 161 í | 170 ¬ | 227 π | 236 ∞ | 245 ⌡ | 254 ■ |
| 134 å | 143 Å | 152 ÿ | 162 ó | 171 ½ | 228 Σ | 237 ∅ | 246 ÷ | |

m-0779

Figure D-13. U.K. English Special Characters

## D.9 U.S. ENGLISH

Figure D-14 is the U.S. English template, and Figure D-15 shows the special characters available with the U.S. English keyboard program.

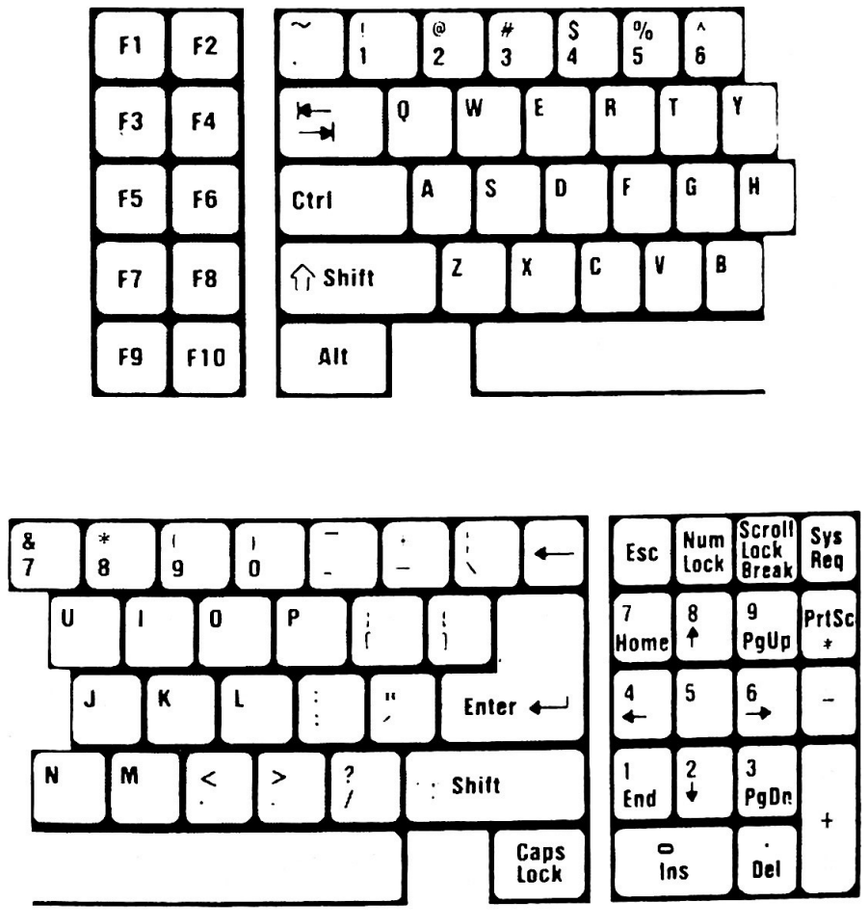


Figure D-14. U.S. English Keyboard Template

| | | | | | | | | |
|---|---|---|---|---|---|---|---|---|
| 127 ⌂ | 136 è | 145 æ | 154 Ü | 163 ú | 172 ¼ | 229 σ | 239 ∩ | 248 ° |
| 128 Ç | 137 ë | 146 Æ | 155 ¢ | 164 ñ | 173 ¡ | 230 µ | 240 ≡ | 249 • |
| 129 ü | 138 è | 147 ô | 156 £ | 165 Ñ | 174 « | 231 τ | 241 ± | 250 · |
| 130 é | 139 ï | 148 ö | 157 ¥ | 166 ª | 175 » | 232 Φ | 242 ≥ | 251 √ |
| 131 â | 140 î | 149 ò | 158 Pts | 167 º | 224 α | 234 Ω | 243 ≤ | 252 ⁿ |
| 132 ä | 141 ì | 150 û | 159 ƒ | 168 ¿ | 225 ß | 235 δ | 244 ⌠ | 253 ² |
| 133 à | 142 Ä | 151 ù | 160 á | 169 ⌐ | 226 Γ | 236 ∞ | 245 J | 254 ■ |
| 134 å | 143 Å | 152 ÿ | 161 í | 170 ¬ | 227 π | 237 ∅ | 246 ÷ | 255 |
| 135 ç | 144 É | 153 Ö | 162 ó | 171 ½ | 228 Σ | 238 ∈ | 247 ≈ | |

m-0778

Figure D-15. U.S. English Special Characters

# APPENDIX E
# TECHNICAL DATA

## E.1 SYSTEM UNIT SPECIFICATIONS

Table E-1. General Specifications

| | | |
|---|---|---|
| **CPU** | | 80386 32-bit microprocessor |
| **Word Size** | Data Path: | 8, 16, 32 bits |
| | Physical Addressing: | $2^{20}$ bytes in real mode<br>$2^{32}$ bytes in protected mode |
| | Virtual Addressing: | $2^{46}$ byes in protected mode |
| **Clock Rates** | Processor clock: | 16 MHz |
| **Expansion Slots** | 32-bit slots | 2 |
| | 16-bit (AT) slots | 4 |
| | 8-bit (PC) slots | 2 |
| **Memory** | EPROM: | up to 128KB |
| | RAM on board: | 512KB |
| | Extended RAM: | 0 to 16MB on memory expansion boards. 2MB and 8MB boards are available for 32-bit slots. |
| | Expanded RAM: | option cards in the 16-bit slots or EEMS emulation programs used with extended RAM |

Table E-1. General Specifications (continued)

| | | |
|---|---|---|
| **Dimensions** | Width: | 21.3 inches (541 mm) |
| | Height | 6.5 inches (163 mm) |
| | Depth | 17.3 inches (441 mm) |
| | Weight | 44 pounds (20 kg) |
| **Environment** | Operating Temperature | 15.6° to 32.2° C (60° to 90° F) |
| | Storage Temperature | -34° to 60° C |
| | Operating Humidity | 5% to 85%, noncondensing |
| | Storage Humidity | 5% to 95% noncondensing |
| | Altitude | 7,000 feet (2133 m) maximum |
| | Noise | 50 dB, average |

Table E-2. AC Input Requirements

| Voltage Selected | Voltage Range | Maximum Input Current | Frequency Limits |
|---|---|---|---|
| 115 | 100 - 125 | 5A | 47 - 63 Hz |
| 230 | 200 - 250 | 3A | 47 - 63 Hz |

Table E-3. Power Supply Output Specifications

| Voltage | Current |
|---|---|
| -5V | 23.0A maximum continuous |
| +12V | 8.0A maximum continuous<br>11.0A maximum for 15 seconds |
| -12V | 0.5A maximum continuous |
| -5V | 0.5A maximum continuous (not used) |
| Total available power output is 220 watts. | |

Table E-4. Power Consumption of System Board

| Voltage and Tolerance | Nominal Current | Watts |
|---|---|---|
| +5 v +/- 5%<br>+12 v +/- 10%<br>-12 v +/- 10% | 5.2 A<br>0.06 A<br>0.08 A | 26.00<br>0.72<br>0.96 |
| TOTAL | | 27.68 |

Table E-5. System Current Requirements

| Use | +5v | +12v | -12v | -5v |
|---|---|---|---|---|
| System board | 5.2A | 0.06A | 0.08A | - |
| 1.2MB diskette drive | 0.65A | 0.90A | - | - |
| 40MB fixed disk | 1.5A | 3.0A | - | - |
| 2MB MEM020 memory board | 1.0A | - | - | - |
| The values in this table are theoretical maximum current requirements. Your system may require less. | | | | |

The +12V currents shown in Table E-5 for disk drives are maximum seek currents. The peak currents during power-up are higher than these figures but the power supply has a peak current capability of 11.0A for 15 seconds to handle this.

**NOTE** Total power loading for the system should not exceed 220 watts.

## E.2 SYSTEM BOARD SPECIFICATIONS

The system board is a 12 inch by 13.8 inch printed wiring board that contains the circuits for a functional, advanced personal computer using the Intel iAPX 386 Central Processing Unit. The system board includes expansion bus capability for the addition of optional feature boards. Principle features of the system board include:

- 16MHz Intel 80386 central processor and support circuits
- Socket for 80387 or 10MHz 80287 math coprocessor
- Two sockets for EPROM memory
- RAM memory (sixteen 64K by 4 chips for a total fo 512K base memory)
- Two PC- and PC/XT compatible 8-bit expansion slots
- Four PC AT-compatible 16-bit slots
- Two slots for high-speed, 32-bit RAM expansion
- keyboard interface
- Clock/calendar with battery-backed CMOS memory
- Sixteen interrupts
- Seven Direct Memory Access (DMA) channels

- One IBM-compatible serial RS-232C communications port
- One IBM-compatible parallel printer port
- Speaker drive.

Table E-6 shows the access times for 32-bit read and write operations using the RAM on the system board (or the RAM on one of the Intel 32-bit memory boards). The table shows the times for both busy and nonbusy banks of memory. A busy bank is one to which the CPU has made consecutive accesses. When alternating between banks, the memory is nonbusy. For comparison, the table also lists the ROM access times and the access times for boards plugged into the 8-bit (PC-compatible) and 16-bit (AT-compatible) slots.

Table E-6. System Board Memory Access Times

| Operation | CPU Clock Cycles (16MHz) | Time (ns) |
|---|---|---|
| 32-bit read of system board RAM | | |
| Read from nonbusy bank | 3 | 187.5 |
| Read from busy bank | 5 | 312.5 |
| 32-bit write of system board RAM | | |
| Write to nonbusy bank | 4 | 250 |
| Write to busy bank | 6 | 373.75 |
| 32-bit ROM read (two 16-bit accesses) | 12 | 747.5 |
| 8-bit read/write of expansion slot | | |
| 8-bit (PC-compatible) slot | 13[1] | 812.5 |
| 16-bit (AT-compatible) slot | 8[1] | 500 |
| 16-bit read/write of expansion slot | | |
| 8-bit (PC-compatible) slot | 25[1] | 1562.5 |
| 16-bit (AT-compatible) slot | 8[1] | 500 |
| 32-bit read/write of expansion slot | | |
| 8-bit (PC-compatible) slot | 50[1] | 3125 |
| 16-bit (AT-compatible) slot | 16[1] | 1000 |

1 Depending on the previous cycle, this access might take one additional clock cycle (62.5 ns).

## E.2.1 Integral Serial Port Specification

Connector J12 on the system board is a 2x13 (26-pin) header that provides the serial communication channel. This connector can map to either a DB25 (PC style) RS-232 connector or a DB9 (AT style) connector according to the pin-out specification listed in Table E-7.

Table E-7. Integral Serial Port Connector Pin-Out Specification

| J12 PIN # | DB9 PIN # | DB25 PIN # | SIGNAL/FUNCTION |
|---|---|---|---|
| 1 | 1 | - | DCD Carrier Detect |
| 2 | 6 | 6 | DSR Data Set Ready |
| 3 | 2 | 3 | RXD Receive Data |
| 4 | 7 | 4 | RTS Request to Send |
| 5 | 3 | 2 | TXD Transmit Data |
| 6 | 8 | 5 | CTS Clear to Send |
| 7 | 4 | 20 | DTR Data Terminal Ready |
| 8 | 9 | 22 | RI Ring Indicator |
| 9 | 5 | 7 | Ground |
| 24 | - | 25 | MGTEST Mfg. Test |
| 23 | - | - | Key (pin missing) |

## E.2.2 Integral Parallel Printer Port Specification

Connector J11 on the system board is a 2x13 (26-pin) header that provides the integral parallel printer port. You can use a cable to carry this port off the system board and onto a standard DB25 connector using the IBM PC parallel printer pin-out standard. The typical mating connector on a Centronics-type printer is a 36-pin ribbon cable. The interface is TTL compatible. The pin-out specification for this connector is shown in Table E-8.

Table E-8. Integral Printer Port Connector Pin-Out Specification

| J11 PIN # | DB25 PIN # | 36-PIN RIBBON CABLE PIN # | SIGNAL/FUNCTION |
|---|---|---|---|
| 1 | 1 | 1 | STROBE* |
| 3 | 2 | 2 | PRTD0 Data Bit 0 |
| 5 | 3 | 3 | PRTD1 Data Bit 1 |
| 7 | 4 | 4 | PRTD2 Data Bit 2 |
| 9 | 5 | 5 | PRTD3 Data Bit 3 |
| 11 | 6 | 6 | PRTD4 Data Bit 4 |
| 13 | 7 | 7 | PRTD5 Data Bit 5 |
| 15 | 8 | 8 | PRTD6 Data Bit 6 |
| 17 | 9 | 9 | PRTD7 Data Bit 7 |
| 19 | 10 | 10 | ACK* Acknowledge |
| 21 | 11 | 11 | BUSY |
| 23 | 12 | 12 | PE Paper End |
| 25 | 13 | 13 | SLCT Select |
| 2 | 14 | 14 | AUTOFDXT* Auto Feed |
| 4 | 15 | 32 | ERROR* |
| 6 | 16 | 31 | INIT* Initializing Printer |
| 8 | 17 | 36 | SLCTIN* Select Input |
| 10,12,14, 16,18,22,24 | 18-25 | 19-30,33 | Ground |
| - | - | 17 | Chassis ground |
| 20 | - | - | Key (pin missing) |
| 26 | - | - | No connection |

## E.2.3 8-Bit Expansion Slots

J2 through J9 on the system board are the IBM PC- and PC XT-compatible 62-pin expansion slots. This 62-pin interface carries addresses to 1M byte and allows 8-bit data transfers. When 8-bit expansion cards occupy the slots, the slots run with 8MHz bus cycles. Slots J7 and J8 also combine with slot extensions J19 and J20 to form the 32-bit slots. When Intel MEM020 memory cards occupy the 32-bit slots, those slots run with 16MHz bus cycles.

Table E-9 lists the pin-out specification for the 8-bit slots.

Table E-9. Pin-Out Specification for 8-Bit Expansion Slot

| I/O | SIGNAL | PIN # | PIN # | SIGNAL | I/O |
|---|---|---|---|---|---|
| - | GND | 1 | 2 | IOCHCK* | I |
| O | RSTDEV | 3 | 4 | D7 | I/O |
| - | +5V | 5 | 6 | D6 | I/O |
| I | IRQ9 | 7 | 8 | D5 | I/O |
| - | -5V | 9 | 10 | D4 | I/O |
| I | DRQ2 | 11 | 12 | D3 | I/O |
| - | -12V | 13 | 14 | D2 | I/O |
| I | SRDY* | 15 | 16 | D1 | I/O |
| - | +12V | 17 | 18 | D0 | I/O |
| - | GND | 19 | 20 | IOCHRDY | I |
| O | MEMW* | 21 | 22 | AEN | O |
| O | MEMR* | 23 | 24 | A19 | I/O |
| O | IOWC* | 25 | 26 | A18 | I/O |
| O | IORC* | 27 | 28 | A17 | I/O |
| O | DACK3* | 29 | 30 | A16 | I/O |
| I | DRQ3 | 31 | 32 | A15 | I/O |
| O | DACK1* | 33 | 34 | A14 | I/O |
| I | DRQ1 | 35 | 36 | A13 | I/O |
| I/O | MEMREF* | 37 | 38 | A12 | I/O |
| O | SYSCLK | 39 | 40 | A11 | I/O |
| I | IRQ7 | 41 | 42 | A10 | I/O |
| I | IRQ6 | 43 | 44 | A9 | I/O |
| I | IRQ5 | 45 | 46 | A8 | I/O |
| I | IRQ4 | 47 | 48 | A7 | I/O |
| I | IRQ3 | 49 | 50 | A6 | I/O |
| O | DACK2* | 51 | 52 | A5 | I/O |
| O | TC | 53 | 54 | A4 | I/O |
| O | BUSALE | 55 | 56 | A3 | I/O |
| - | +5V | 57 | 58 | A2 | I/O |
| O | 840SC | 59 | 60 | A1 | I/O |
| - | GND | 61 | 62 | A0 | I/O |

## E.2.4 16-Bit Expansion Slots

J16, J17, J18, and J21 on the system board are extensions to the 62-pin PC-compatible slots that increase addressability to 16M bytes and enable 16-bit data transfers. These 32-pin slots extend in-line with the PC slots to form 16-bit slots that are compatible with those available on the PC AT. The pin-out specification for this slot extension is given in Table E-10. The 16-bit expansion slots operate with 8MHz bus cycles.

Table E-10. Pin-Out Specification for 16-Bit Expansion Slot Extension

| I/O | SIGNAL | PIN # | PIN # | SIGNAL | I/O |
|---|---|---|---|---|---|
| I | FMEM* | 1 | 2 | IOBHE* | I/O |
| I | FIO* | 3 | 4 | P2A23 | I/O |
| I | IRQ10 | 5 | 6 | P2A22 | I/O |
| I | IRQ11 | 7 | 8 | P2A21 | I/O |
| I | IRQ12 | 9 | 10 | P2A20 | I/O |
| I | IRQ15 | 11 | 12 | P2A19 | I/O |
| I | IRQ14 | 13 | 14 | P2A18 | I/O |
| O | DACK0* | 15 | 16 | P2A17 | I/O |
| I | DRQ0 | 17 | 18 | MRDC* | I/O |
| O | DACK5* | 19 | 20 | MWTC* | I/O |
| I | DRQ5 | 21 | 22 | D8 | I/O |
| O | DACK6* | 23 | 24 | D9 | I/O |
| I | DRQ6 | 25 | 26 | D10 | I/O |
| O | DACK7* | 27 | 28 | D11 | I/O |
| I | DRQ7 | 29 | 30 | D12 | I/O |
| - | +5V | 31 | 32 | D13 | I/O |
| I | SECMAST* | 33 | 34 | D14 | I/O |
| - | GND | 35 | 36 | D15 | I/O |

## E.2.5 High-Speed 32-Bit RAM Expansion Slots

Slots J7/J19 and J8/J20 on the system board are 86-pin slots available for high-speed, 32-bit RAM expansion cards. The Intel MEM020 and MEM080 memory boards fit in these slots. The slots operate at 16MHz, the same timing as the system board RAM. Table E-11 lists the pin-out specification for these slots.

Table E-11. Pin-Out Specification for 32-Bit RAM Expansion Slot

| I/O | SIGNAL | PIN # | PIN # | SIGNAL | I/O |
|---|---|---|---|---|---|
| O | CPUA3 | 1 | 2 | EXPD0 | I/O |
| O | CPUA4 | 3 | 4 | EXPD1 | I/O |
| O | CPUA5 | 5 | 6 | EXPD2 | I/O |
| - | GND | 7 | 8 | EXPD3 | I/O |
| O | CPUA6 | 9 | 10 | EXPD4 | I/O |
| O | CPUA7 | 11 | 12 | EXPD5 | I/O |
| O | RA11 | 13 | 14 | EXPD6 | I/O |
| O | CPUA12 | 15 | 16 | EXPD7 | I/O |
| O | CPUA13 | 17 | 18 | +5V | - |
| - | GND | 19 | 20 | EXPD8 | I/O |
| O | CPUA14 | 21 | 22 | EXPD9 | I/O |
| O | CPUA15 | 23 | 24 | EXPD10 | I/O |
| O | CPUA16 | 25 | 26 | EXPD11 | I/O |
| O | CPUA17 | 27 | 28 | EXPD12 | I/O |
| O | CPUA18 | 29 | 30 | EXPD13 | I/O |
| - | +5V | 31 | 32 | EXPD14 | I/O |
| O | CPUA19 | 33 | 34 | EXPD15 | I/O |
| O | CPUA20 | 35 | 36 | NC | - |
| O | RA8 | 37 | 38 | EXPD16 | I/O |
| O | RA9 | 39 | 40 | EXPD17 | I/O |
| O | RA10 | 41 | 42 | EXPD18 | I/O |
| - | GND | 43 | 44 | EXPD19 | I/O |
| O | CPUA21 | 45 | 46 | EXPD20 | I/O |
| O | PI0_7 | 47 | 48 | EXPD21 | I/O |
| I | PO0_7 | 49 | 50 | EXPD22 | I/O |
| O | PI8_15 | 51 | 52 | EXPD23 | I/O |
| I | PO8_15 | 53 | 54 | EXPD24 | I/O |
| - | GND | 55 | 56 | EXPD25 | I/O |
| O | PI16_23 | 57 | 58 | EXPD26 | I/O |
| I | PO16_23 | 59 | 60 | EXPD27 | I/O |
| O | PI24_31 | 61 | 62 | EXPD28 | I/O |
| I | PO24_31 | 62 | 63 | EXPD29 | I/O |
| O | CPUA22 | 64 | 65 | EXPD30 | I/O |
| - | GND | 67 | 68 | EXPD31 | I/O |
| O | CPUA23 | 69 | 70 | +5V | - |
| - | NC | 71 | 72 | LA19B0 | O |
| - | NC | 73 | 74 | LA21B0 | O |
| O | SLEB0* | 75 | 76 | LA19B1 | O |
| O | SLEB1* | 77 | 78 | LA21B1 | O |
| - | GND | 79 | 80 | WE_0 | O |
| O | RMSEL0* | 81 | 82 | WE_1 | O |
| O | RMSEL1* | 83 | 84 | WE_2 | O |
| O | MEMREF | 85 | 86 | WE_3 | O |

Slots J7/J19 and J8/J20 can also contain standard 8-bit PC boards. However, if you insert one 62-pin PC-compatible card and one 2M byte 86-pin memory card in these two slots, you must place the memory card in slot J7/J19 and rejumper the system board accordingly.

For example, suppose all the slots on the system board are filled except for slots J7/J19 and J8/J20. In addition, suppose you still need to insert a MEM020 board and a video adapter board into your computer. In this situation, you must insert the MEM020 board into slot J7/J19 and the video adapter board into slot J8/J20. Then you must jumper the system board to specify that only one 2M-byte memory board is present. Chapter 2 describes the jumper settings.

## E.2.6 Keyboard Connector

J1, the keyboard connector, is a 5-pin DIN connector that provides an interface for keyboards that are compatible with the IBM AT keyboard. The pin assignments are shown in Table E-12.

The RST* pin is jumper configurable on the system board. In one setting, this pin sends a reset pulse to the keyboard when a system reset occurs. In the other setting (the default configuration), the pin is electrically disconnected. Refer to Chapter 2 for the jumper settings.

The BIOS supports two kinds of keyboards: those that are compatible with the original IBM AT keyboard and those that are compatible with IBM's 101-key enhanced keyboard. Programs that have difficulty running with IBM's enhanced keyboard will have the same difficulties when running on the SYP301.

Table E-12. Keyboard Connector Pin-Out Specification

| SIGNAL/FUNCTION | J11 PIN # |
|---|---|
| KEYCLK (clock) | 1 |
| KEYDAT (data) | 2 |
| RST* | 3 |
| Ground | 4 |
| +5V | 5 |
| Cable shield (connector case) | 6,7 |

The pin numbers of the keyboard connector are as follows:

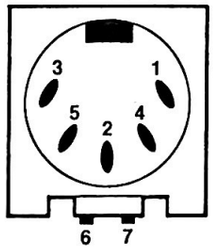


x-1604

## E.2.7 Battery Connector

J10 is a battery connector that enables you to provide battery-backed power for the real-time clock chip. The battery connector is a 1x4 header whose pin assignments are shown in Table E-13.

Table E-13. Battery Connector Pin-Out Specification

| SIGNAL/FUNCTION | J10 PIN # |
|---|---|
| Battery (plus) | 1 |
| Key (pin removed) | 2 |
| Ground (minus) | 3 |
| Ground (minus) | 4 |

## E.2.8 Keylock Interface

Connector J23 provides the interface that enables you to connect an electrical interlock, such as a key-activated switch, to lock out the keyboard. The keylock connector is a 1x5 header whose pin assignments are shown in Table E-14.

Table E-14. Keylock Connector Pin-Out Specification

| SIGNAL/FUNCTION | J23 PIN # |
|---|---|
| Power for LED power-on light | 1 |
| Key (pin removed) | 2 |
| Ground | 3 |
| Keylock | 4 |
| Ground | 5 |

## E.2.9 Power Connectors

J13 and J14, the power connectors, are 12- and 6-pin connectors, respectively, that supply power to the system board and to the eight expansion slots. Each pin has a 7-amp current-carrying capacity. J13 is the primary power connector. When using an AT-compatible power supply (such as the one in the SYP301), pins 1 through 6 of one connector (the one that supplies +12V, -12V, SYSRST*, and +5V) must match pins 1 through 6 of J13. Pins 1 through 6 of the other connector (the one that supplies +5V, -5V, and ground) should match pins 7 through 12 of J13.

If additional power is required that would cause the pins in J13 to exceed the 7-amp capacity, a power supply with a third plug (one with three +5V pins and three ground pins) can be used. That plug can connect to J14, with pin 1 of the plug matching pin 1 of J14.

Figures E-1 and E-2 show the pin assignments for J13 and J14. Figure E-1 applies to system boards numbered PBA451213. Figure E-2 applies to system boards numbered PBA149422 (-003 and up). The only difference in the power supply connectors is that the J14 pins are reversed.

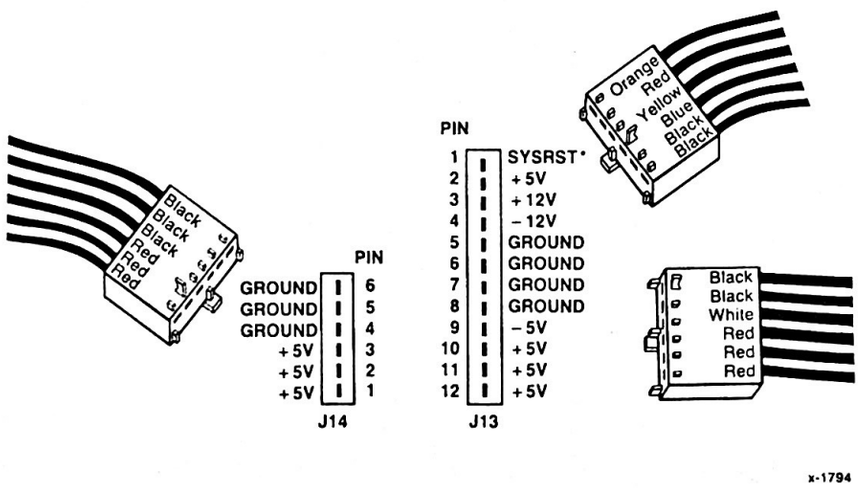


Figure E-1. Power Connector Pins (PBA451213)

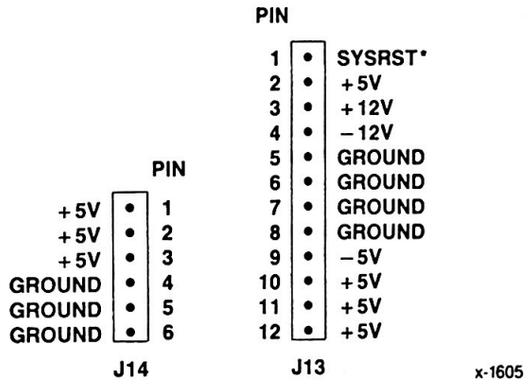


Figure E-2. Power Connector Pins (PBA149422)

## E.3 DISK DRIVE SPECIFICATIONS

Table E-15. 1.2MB Diskette Drive Specifications

| | |
|---|---|
| Unformatted capacity | 1.6M bytes - high-density<br>500K bytes - double-density (read only) |
| Formatted capacity | 1.2M bytes - high-density (.5K x 15 x 2 x 77)<br>360K bytes - double-density (read only) |
| Tracks per side | 77 high-density<br>40 double-density (read-only) |
| Track density | 96 TPI |
| Rotational Speed | 360 RPM high-density<br>300 RPM double-density |
| Recording mode | MFM |

Table E-16. Disk Controller Jumper Settings

| Pins | Comments |
|---|---|
| E2 - E3 | Selects primary addresses (factory setting) |
| E5 - E6 | Selects primary addresses (factory setting) |
| E1 - E2 | Selects secondary settings |
| E4 - E5 | Selects secondary settings |
| E7 - E8 | Supports 360 RPM floppy disk drives (factory setting) |
| E8 - E9 | Supports 300 RPM floppy disk drives |

If an additional diskette drive is added to the system, slide rails (included with the SYP301 package) must be attached to the drive to enable it to fit properly into the drive bay. With the slide rails attached, the drive can be secured to the system using M3 x .5 x 8 hex head phillips screws with washers. These screws fasten the slide rails to the front of the system unit.

Table E-17. Standard Disk Controller and Power Supply Connections

| Cable Connector | Controller Connector | Drive | Purpose |
|---|---|---|---|
| 34-pin | J1 | A & B | data and control |
| 20-pin | J3 | D | data |
| 20-pin | J4 | C | data |
| 34-pin | J5 | C & D | control |
| 4-pin | J6 | C & D | LED |
| PS3 | - | A | power |
| PS4 | - | B or tape | power |
| PS5 | - | D | power |
| PS6 | - | C | power |

**NOTE** This floppy/fixed drive controller board cannot be co-resident with other drive controllers.

## E.4 KEYBOARD INTERFACE SPECIFICATION

The maximum power requirement of the keyboard is 500 mA at +5 VDC. The keyboard has an attached cable and connector that connects to the DIN receptacle at the back of the system unit. See Table E-18 for a description of the connector.

The cable is a shielded cable containing a +5 VDC line, a ground, and two signal lines (Data and Clock). Data I/O is Serial TTL. The keyboard has its own internal reset circuit and does not use the reset line of the SYP301.

Table E-18. Keyboard Interface Connector Chart

| Pin | Description | Voltage |
|---|---|---|
| 1 | +keyboard Clock | TTL |
| 2 | +keyboard Data | TTL |
| 3 | No connection | N/A |
| 4 | Power Supply Ground | 0 V |
| 5 | Power Supply | +5 VDC |

The following diagram shows the view looking into the connector on the keyboard cable.

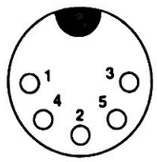


2648

Capacitive key switches are used with a microprocessor performing the functions of keyswitch scanning, translating key presses to IBM down-up scan codes, and maintaining bidirectional serial communications with the host.

Keyboard communication with the SYP301 is accomplished by the keyboard sending IBM down-up scan codes to the host rather than ASCII codes. For example, key number 16 (Tab) produces the hex code 0D on make (down) and 8D on break (up). Break codes are formed by adding hex 80 to the make codes. Table E-19 lists the keyboard keys with their respective key numbers and make codes.

Table E-19. Keyboard Scan Code Chart

| KEY NUMBER | KEY NAME | MAKE CODE |
|---|---|---|
| 1 | [tilde]/[grave] | 0E |
| 2 | !/1 | 16 |
| 3 | @/2 | 1E |
| 4 | #/3 | 26 |
| 5 | $/4 | 25 |
| 6 | %/5 | 2E |
| 7 | ¢/6 | 36 |
| 8 | &/7 | 3D |
| 9 | */8 | 3E |
| 10 | (/9 | 46 |
| 11 | )/0 | 45 |
| 12 | _/- | 4E |
| 13 | +/= | 55 |
| 14 | p/∠ | 5D |
| 15 | <--- | 66 |
| 16 | p<--/-->p | 0D |
| 17 | Q | 15 |
| 18 | W | 1D |
| 19 | E | 24 |
| 20 | R | 2D |
| 21 | T | 2C |
| 22 | Y | 35 |
| 23 | U | 3C |
| 24 | I | 43 |
| 25 | O | 44 |
| 26 | P | 4D |
| 27 | [left brace]/[ | 54 |
| 28 | [right brace]/] | 5B |
| 30 | Ctrl | 14 |
| 31 | A | 1C |
| 32 | S | 1B |
| 33 | D | 23 |
| 34 | F | 2B |
| 35 | G | 34 |
| 36 | H | 33 |
| 37 | J | 3B |
| 38 | K | 42 |
| 39 | L | 4B |
| 40 | :/; | 4C |
| 41 | "/' | 52 |

Table E-19. Keyboard Scan Code Chart (continued)

| KEY NUMBER | KEY NAME | MAKE CODE |
|---|---|---|
| 43 | Enter | 5A |
| 44 | Shift (left) | 12 |
| 46 | Z | 1A |
| 47 | X | 22 |
| 48 | C | 21 |
| 49 | V | 2A |
| 50 | B | 32 |
| 51 | N | 31 |
| 52 | M | BA |
| 53 | </, | 41 |
| 54 | >/. | 49 |
| 55 | ?// | 4A |
| 57 | Shift (right) | 59 |
| 61 | Space Bar | 29 |
| 64 | Caps Lock | 58 |
| 65 | F2 | 06 |
| 66 | F4 | 0C |
| 67 | F6 | 0B |
| 68 | F8 | 0A |
| 69 | F10 | 09 |
| 70 | F1 | 05 |
| 71 | F3 | 04 |
| 72 | F5 | 03 |
| 73 | F7 | 83 |
| 74 | F9 | 01 |
| 90 | Esc | 76 |
| 91 | 7/Home | 6C |
| 92 | 4/<--- | 6B |
| 93 | 1/End | 69 |
| 95 | Num Lock | 77 |
| 96 | 8/[up arrow] | 75 |
| 97 | 5/ | 73 |
| 98 | 2/[down arrow] | 72 |
| 99 | 0/Ins | 70 |
| 100 | Scroll Lock | 7E |

Table E-19. Keyboard Scan Code Chart (continued)

| KEY NUMBER | KEY NAME | MAKE CODE |
|---|---|---|
| 101 | 9/PgUp | 7D |
| 102 | 6/---> | 74 |
| 103 | 3/PgDn | 7A |
| 104 | Del | 71 |
| 105 | Sys Req | 84 |
| 106 | PrtSc/* | 7C |
| 107 | - | 7B |
| 108 | + | 79 |

Figure E-3 illustrates the timing diagram for the interface between the keyboard and the system.

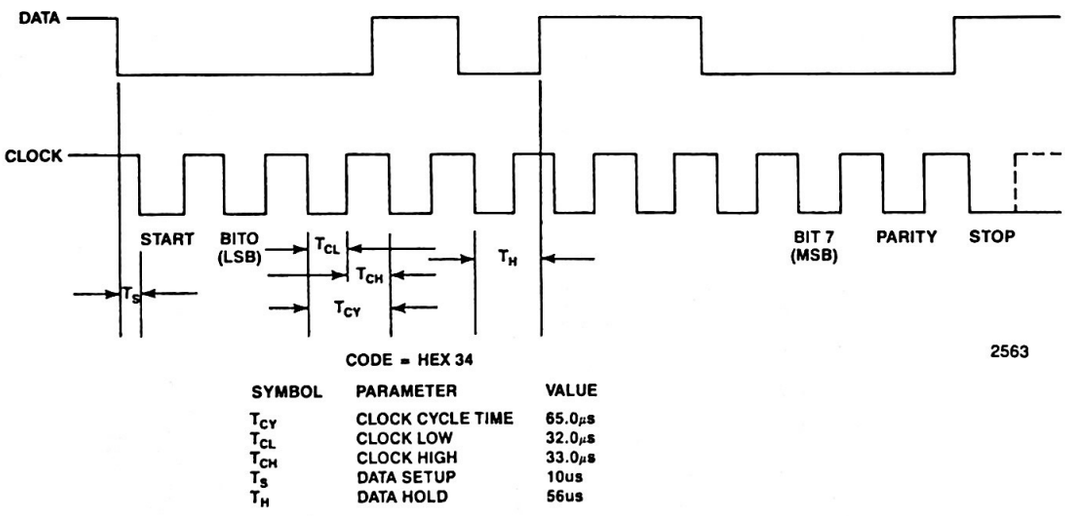


| SYMBOL | PARAMETER | VALUE |
|---|---|---|
| $T_{CY}$ | CLOCK CYCLE TIME | 65.0μs |
| $T_{CL}$ | CLOCK LOW | 32.0μs |
| $T_{CH}$ | CLOCK HIGH | 33.0μs |
| $T_S$ | DATA SETUP | 10us |
| $T_H$ | DATA HOLD | 56us |

Figure E-3. Keyboard to System Timing

# APPENDIX F
# HARD DISK SPECIFICATIONS

This appendix lists the specifications for the fixed disk drives available from Intel. Contact your Intel representative for more information about the fixed disk options available.

Table F-1. 40MB Fixed Disk Specifications

| | |
|---|---|
| Unformatted capacity | 42.66M bytes |
| Actual DOS capacity | 32M bytes (.5K bytes/sector x 64K sectors) |
| Number of cylinders | 512 |
| Number of read/write heads | 8 |
| Recording mode | MFM |
| Drive type | 29 |

Table F-2. 80MB Fixed Disk Specifications

| | |
|---|---|
| Unformatted capacity | 86.5M bytes |
| Actual DOS capacity | 32M bytes (.5K bytes/sector x 64K sectors) |
| Number of cylinders | 830 |
| Number of read/write heads | 10 |
| Recording mode | MFM |
| Drive type | 37 |

Table F-3. 140MB Fixed Disk Specifications

| | |
|---|---|
| Unformatted capacity | 143.55M bytes |
| Actual DOS capacity | 32M bytes (.5K bytes/sector x 64K sectors) |
| Number of cylinders | 918 |
| Number of read/write heads | 15 |
| Recording mode | MFM |
| Drive type | 41 |

229 40 MEG

189

80 MEG 299 - IDE 690

# APPENDIX G
# SERVICE INFORMATION

## G.1 SERVICES PROVIDED

Customer Support Service Engineering provides Return Replacement Authorization (RRA) and Direct Return Authorization (DRA) services.

- Return Replacement Authorization (RRA): Under this service, Intel will replace a defective product. Return the defective product to Intel, freight prepaid. The RRA service is not offered on all products, is subject to availability, and is available only to customers in a nonserviceable area. Intel expects to ship 90% of replacement products within 48 hours of receiving the defective product.

- Direct Return Authorization (DRA): This service provides repair work. Return the defective product to Intel, freight prepaid. Intel will repair and test the product and update it with all mandatory Engineering Change Orders. The product serial number will not change. Normal turnaround time is four to six weeks.

## G.2 WHEN YOU CALL

Contact CSO for an RRA or DRA authorization number. Please write the authorization number on the packing slip, the purchase order, and other related documents. Before calling, have the following information ready:

- Part and serial number of the product.

- Purchase order number, for repair and shipping charges.

- For warranty repair, proof of purchase showing the product was received within 90 days of the service request date. Without proof, services will be billed at the current rate.

- Your shipping and billing addresses.

- Contact name and telephone number at your site.

## G.3 PACKAGING REQUIREMENTS

Before shipping, remove all user modifications. Protect the equipment from damage in transit by using these guidelines:

1. Place boards in antistatic bags and then in padded shipping bags.
2. Protect the product with padding, such as flow pack or foam.
3. Write the return authorization number on the outside of the box and label the box "Fragile."

**NOTE** Damage due to lack of compliance with safe return packaging could result in extra repair charges.

4. Send the product and all correspondence to the address below.

## G.4 SHIPPING ADDRESS

Intel Corporation
Customer Support Marketing Administration
2402 W. Beardsley Road
Phoenix, Arizona 85027

## G.5 OBTAINING DRA OR RRA SERVICE

PBA 451213-004

In the United States or Canada, call:

1-800-INTEL-4-U (1-800-468-3548)

In Europe or Japan, contact your local sales office.

In other countries, contact your local distributor.

503 696-7257

Setup. Control Alt. INSERT
FOR
BIOS

# GLOSSARY

| | |
|---|---|
| A | Ampere. |
| adapter | An auxiliary device or unit used to extend the operation of another system. |
| application | A program or set of programs used to do work on the computer. Some categories of application programs are word processors, database managers, spreadsheet managers, and project managers. Specific examples of application programs are MultiMate, dBase II, 1-2-3, Framework, and Symphony. |
| AUTOEXEC.BAT | A special-purpose batch file. When you turn on your computer, or restart it by pressing the **<Ctrl><Alt><Del>** combination, DOS searches the system disk for the AUTOEXEC.BAT file. If DOS finds one, it executes the commands in the file. |
| base memory | Up to 640K bytes of memory accessible to DOS. This is also referred to as conventional memory. Contrast with expanded memory and extended memory. |
| BASIC | A programming language that uses common English words. |
| basic input/output system (BIOS) | The feature of the computer that provides a basic level of control of the major I/O devices, and relieves programmers of having to learn about hardware device characteristics. |
| batch file | A file that saves time and effort and which is identified by the .BAT extension following the file name. If you use a sequence of DOS commands frequently, you can create a batch file containing the commands, and then execute the entire sequence by typing the name of the file. This reduces the number of keystrokes needed to execute a sequence of commands. |
| BIOS | Basic input/output system. |
| board | A rectangular piece of fiberglass that has pins on one side and electronic parts on the other. In the SYP301, boards are roughly 1/16-inch thick, and 3 inches or larger on each side. The SYP301 can contain several boards. The largest is the system board. Other boards can include a video adapter, a disk controller board, a network communication board, memory boards, and multifunction boards. Boards are sometimes referred to as cards. |

| | |
|---|---|
| boot | A technique that the computer uses to bring itself into an initial functional state. For example, a computer that runs DOS boots itself by causing the computer to read the first few of its instructions from disk. Those instructions are sufficient to read in the rest of DOS from disk. |
| buffer | (1) An area of storage that is temporarily reserved for use in performing an input/output operation into which data is written or from which data is read. Synonymous with I/O area. (2) A portion of memory storage for temporarily holding input or output data. |
| C | (1) Celsius (centigrade). (2) A programming language. |
| card | Used interchangeably with board. |
| CONFIG.SYS file | A special-purpose file that provides DOS with information about the special kinds of hardware or software used with the computer. Whenever the computer is turned on or rebooted by pressing **<Ctrl><Alt><Del>**, DOS searches the system disk for the CONFIG.SYS file. If DOS finds one, it reads the commands from the file and uses them to prepare the computer for operation. |
| configuration | (1) The arrangement of a computer system as defined by the nature, number, and chief characteristics of its functional units. More specifically, the term can apply to either a hardware configuration or a software configuration. (2) The devices and programs that make up a system. |
| conventional memory | Another term for base memory. |
| dB | Decibel. |
| diagnostic | Pertaining to the detection and isolation of a malfunction or mistake. |
| DIP | Dual in-line package. |
| DIP switch | One of a set of small switches mounted in a dual in-line package. |
| direct memory access (DMA) | A method of transferring data between main storage and I/O devices that does not require processor intervention. |
| disable | To stop the operation of a circuit or device, specifically applied to communications ports. |
| disabled | Pertaining to a state of a processing unit that prevents the occurrence of certain types of interruptions. Synonymous with *masked*. |
| DMA | Direct memory access. |
| DOS | Disk Operating System. |

| | |
|---|---|
| enable | To initiate the operation of a circuit or device, specifically applied to communications ports. |
| expanded memory | Up to 8M bytes of memory that certain add-on boards, such as the Intel Above Board, can add to a personal computer. Expanded memory is distinguished from conventional memory in that it cannot be accessed directly by DOS but must be handled through the expanded memory manager. It is used directly by application programs such as Symphony and Framework.<br><br>Expanded memory also differs from extended memory. Both provide memory in addition to the 640K bytes recognized by DOS, but extended memory can be used only by the MS-DOS RAMDRIVE.SYS (virtual disk) or by operating systems, such as XENIX, that support protected mode of the 80286 or 80386 processor. |
| expansion slot | A space inside the SYP301 into which boards can be inserted. The SYP301 has eight expansion slots: two are restricted to boards designed for the IBM PCs and XTs, four can accept AT-compatible boards, and two slots accept 32-bit boards. |
| extended memory | Memory whose addresses start at 1M byte and which can be accessed only when the processor is running in protected mode. Extended memory can be used by operating systems, such as XENIX, that run in protected mode, and by certain DOS programs, such as the RAMDRIVE.SYS virtual disk, that switch in and out of protected mode to perform special operations. Ordinary DOS applications cannot access extended memory directly. |
| F | Fahrenheit. |
| Hz | Hertz. |
| input/output (I/O) | (1) Pertaining to a device or to a channel that may be involved in an input process and, at a different time, in an output process. Input/output may be used in place of input/output data, input/output signal, and input/output terminals, when such usage is clear in a given context. (2) Pertaining to a device whose parts can be performing an input process and an output process at the same time. (3) Pertaining to either input or output, or both. |
| interrupt | (1) A suspension of a process, such as the execution of a computer program, caused by an event external to that process and performed in such a way that the process can be resumed. (2) In a data transmission, to take an action at a receiving station that causes the transmitting station to terminate a transmission. (3) Synonymous with interruption. |
| LED | Light-emitting diode. |

| | |
|---|---|
| LPT1, LPT2, and LPT3 | The names DOS assigns to the parallel printer ports in a system. The three names reflect the fact that DOS permits as many as three parallel printer ports in a system. |
| monitor | A device for visual presentation of information as temporary images. |
| network | A group of computers connected and configured such that they can share resources. |
| parallel | (1) Pertaining to the concurrent or simultaneous operation of two or more devices, or to the concurrent performance of two or more activities. (2) Pertaining to the concurrent or simultaneous occurrence of two or more related activities in multiple devices or channels. (3) Pertaining to the simultaneity of two or more processes. (4) Pertaining to the simultaneous processing of the individual parts of a whole, such as the bits of a character and the characters of a word, using separate facilities for the various parts. (5) An alternative to serial. |
| parameter | (1) A variable that is given a constant value for a specified application and that may denote the application. (2) A name in a procedure that is used to refer to an argument passed to that procedure. |
| picture element (pixel) | The smallest displayable unit on a monitor. |
| port | An access point for data entry or exit. |
| POST | Power-On Self Test. A series of diagnostic tests that are run each time the computer's power is turned on. |
| protected mode | A mode of the 80286 and 80386 microprocessors that enable them to provide advanced features, such accessing large amounts of memory and enforcing hardware protection of memory segments. Current versions of DOS do not support protected mode operation, except for special utilities such as the RAMDRIVE.SYS virtual disk. |
| RS-232C | A standard by the Electronics Industries Association for serial communication between computers and external equipment. |
| serial | (1) Pertaining to the sequential performance of two or more activities in a single device. The modifiers serial and parallel usually refer to devices, as opposed to sequential and consecutive, which refer to processes. (2) Pertaining to the sequential or consecutive occurrence of two or more related activities in a single device or channel. (3) Pertaining to the sequential processing of the individual parts of a whole, using the same facilities for successive parts. (4) An alternative to parallel. |

| | |
|---|---|
| setup | (1) In a computer that consists of an assembly of individual computing units, the arrangement of interconnections between the units, and the adjustments needed for the computer to operate. (2) The preparation of the system for normal operation. |
| synchronization | The process of adjusting the corresponding significant instants of two signals to obtain the desired phase relationship between these instants. |
| synchronous transmission | (1) Data transmission in which the time of occurrence of each signal representing a bit is related to a fixed time frame. (2) Data transmission in which the sending and receiving devices are operating continuously at substantially the same frequency and are maintained in a desired phase relationship by means of correction. |
| TTL | Transistor-transistor logic. |
| V | Volt. |
| W | Watt. |

8-bit expansion slots E-7
16-bit expansion slots E-8
32-bit
  expansion slots E-8
  memory configuration 2-9
80386
  clock speed 6-1
  installation 2-20

AC input requirements E-2
access times
  memory E-4
accessing special characters D-2

base memory 4-5, 4-13
battery E-11
  replacement 2-18
beep codes B-5

changing the power cord plug 2-31
checking electrical connections 4-1
clock speed 5-2, 6-1
configuration
  32-bit memory 2-9
  disk controller E-14
  interrupt request line 2-15
  keyboard reset 2-16
  math coprocessor 2-17
  monitor type 2-9
  parallel port 2-14
  printer acknowledge signal 2-16
  ROM size 2-12
  serial port 2-13
connecting
  input/output devices 3-1
  keyboard 3-1
  printer 3-2
connector
  battery E-11
  keyboard E-10
  keylock E-11
  parallel port E-6
  power E-12, E-13
  serial port E-5
conventional memory 4-13

cover
  removal 2-2
  replacement 2-28
CPU clock speed 5-2, 6-1
current options 4-8
current requirements
  system board E-3

date and time 4-7
deturbo mode 6-1
  setting with software 6-2
devices
  operating 5-1
disk drives 5-4
  fixed 4-4, 4-9, 4-17, F-1
  floppy 4-4, 4-9, E-13
diskette drive types 4-9
DRA service G-2
drive type list 4-11
drop cards 2-26

electrical connections 4-1
error messages B-1
  screen B-1
  SETUP B-6
  system board B-4
expansion board installation 2-1, 2-21
expansion slots 2-25
  8-bit E-7
  16-bit E-8
  32-bit E-8
extended memory 4-5, 4-13
external system components 1-2

features of the SYP301 1-1
fixed disk drives 4-4, 4-9, 4-17, F-1
fixed drive types 4-9
floppy diskette drives 4-4, 4-9

glossary Glossary-1

input/output devices
  connecting 3-1
installing
  80387 2-20
  expansion options 2-1, 2-21
  math coprocessor 2-19
  SBCMATH module 2-21
interrupt request line 2-15

introduction to the SYP301 1-1

jumper locations 2-8
jumpers
  disk controller E-14
  interrupt request line 2-15
  keyboard reset 2-16
  math coprocessor 2-17
  memory 2-9
  monitor type 2-9
  parallel port 2-14
  ROM size 2-12
  serial port 2-13

keyboard 5-1, E-15
  connecting 3-1
  connector 2-10
  scan codes E-16
  reset 2-16
  templates D-1
keyclick volume 5-3
keylock 5-4, E-11
keys
  special 5-1

landing zone 4-12
list of drive types 4-11
listing system options 4-3

math coprocessor 2-17
  installation 2-19
memory
  access times E-4
  boards E-8
  configuration 2-9
  extended 4-5
monitor type 2-9
moving the system C-1

operating the devices 5-1
option screens 4-8
optional features 1-2

parallel printer port 2-14, E-6
POST 4-2
power connectors E-12
power consumption
  system board E-3
power cord plug 2-31

power supply output specifications E-2
power-on self test (POST) 4-2
  error messages B-1
precompensation cylinder 4-12
printer
  connecting 3-2
printer acknowledge signal 2-16

recording serial numbers 3-3, A-1
removing the cover 2-2
replacing
  battery 2-18
  cover 2-28
resetting the system 5-2
revision differences 1-4
ROM size selection 2-12
RRA service G-2

SBCMATH module 2-17
  installation 2-21
scan codes
  keyboard E-16
screen messages B-1
scrolling 5-2
serial communications port 2-13
serial numbers
  recording 3-3, A-1
serial port E-5
setting
  base memory 4-13
  current options 4-8
  date and time 4-7
  diskette drive types 4-9
  extended memory 4-13
  fixed disk types 4-9
  video adapter 4-16
SETUP program 4-3
  error messages B-6
shipping to customer service G-2
slots
  8-bit E-7
  16-bit E-8
  32-bit E-8
software 1-4
special characters
  accessing D-2
special keys 5-1

specifications
  floppy disk drive E-13
  system board E-3
  system unit E-1
standard features 1-1
starting the system 4-1
system board 2-6
  errors B-4
  memory access times E-4
  overview 1-2
  power consumption E-3
system options
  listing 4-3
system reset 5-2
system unit
  specifications E-1

technical data E-1
telephone numbers for DRA or RRA service G-2
templates
  keyboard D-1
turbo mode 6-1
  setting with software 6-3

video adapter 4-5, 4-16

intel®

SYP301 Installation and
User's Guide
451684-001

# REQUEST FOR READER'S COMMENTS

Intel's Technical Publications Departments attempt to provide publications that meet the needs of all Intel product users. This form lets you participate directly in the publication process. Your comments will help us correct and improve our publications. Please take a few minutes to respond.

Please restrict your comments to the usability, accuracy, organization, and completeness of this publication. If you have any comments on the product that this publication describes, please contact your Intel representative. If you wish to order publications, contact the Literature Department (see page ii of this manual).

1. Please describe any errors you found in this publication (include page number).

_____

_____

_____

_____

2. Does this publication cover the information you expected or required? Please make suggestions for improvement.

_____

_____

_____

_____

3. Is this the right type of publication for your needs? Is it at the right level? What other types of publications are needed?

_____

_____

_____

_____

4. Did you have any difficulty understanding descriptions or wording? Where?

_____

_____

_____

5. Please rate this publication on a scale of 1 to 5 (5 being the best rating). _____

NAME _____ DATE _____

TITLE _____

COMPANY NAME/DEPARTMENT _____

ADDRESS _____

CITY _____ STATE _____ ZIP CODE _____

(COUNTRY)

Please check here if you require a written reply ☐

WE'D LIKE YOUR COMMENTS . . .

This document is one of a series describing Intel products. Your comments on the back of this form will help us produce better manuals. Each reply will be carefully reviewed by the responsible person. All comments and suggestions become the property of Intel Corporation.

NO POSTAGE NECESSARY IF MAILED IN THE UNITED STATES

**BUSINESS REPLY MAIL**

FIRST CLASS PERMIT NO. 79 HILLSBORO, OR

POSTAGE WILL BE PAID BY ADDRESSEE

**Intel Corporation**
**OMO HDW Technical Publications, MS: HF2-50**
**5200 N.E. Elam Young Parkway**
**Hillsboro, Oregon 97124-9987**

205 N.
EXIT 30
ORCHIDS
EAST TO LIGHT
GHER RD. Left.
2½ Bl on Left.
Rick 9-6
Sat.

INTEL CORPORATION, 3065 Bowers Avenue, Santa Clara, California 95051 (408) **987-8080**

Printed in U.S.A.

OEM SYSTEMS

3961/2K/0288/OSPS/TV/OMO-HW